Table C-1

Test Parameters

TABLE C-1

ANALYSIS PARAMETERS FOR WASTE MIXTURE STORED AT THE CENTRAL STORAGE FACILITY

WASTE	TEST PARAMETER
Acids and acidic wastes	pH TCLP Metals
Bases, including caustic cleaners and decontaminants	pH TCLP Metals
Oils, waste (some of which are ignitable)	Flash Point TCLP Metals Volatile Organics Herbicides Pesticides
Paint wastes with removers	Flash Point Methylene Chloride TCLP Metals Volatile Organics
Plastic formulation contaminated wastes	Cyanide Flash Point Methylene Chloride Trichlorofluoromethane TCLP Metals Volatile Organics
Electroplating Wastes (Non-cyanide)	pH TCLP Metals Volatile Organics
Cyanide bearing wastes	pH Cyanide TCLP Metals
Halogenated Solvents	Methylene Chloride 1,1,2-Trichloroethane Trichloroethane TCLP Metals Volatile Organics
Filtrate from phosphorous sludge burning pans	pH TCLP Metals
Metallic salts and contaminated salts	pH Cyanide Reactivity TCLP Metals
Non-halogenated solvents	Flash Point Methyl ethyl ketone Methyl isobutyl ketone Toluene Xylene TCLP Metals Volatile Organics
Grit Blast Residue (Dust particles removed from air in abrasive sand/grit blast operations removing paint)	TCLP Metals Cyanide

TABLE C-1

ANALYSIS PARAMETERS FOR WASTE MIXTURE STORED AT THE CENTRAL STORAGE FACILITY

Ash from Open Burning/Open Detonation operations	TCLP Metals Volatile Organics Herbicides Pesticides Reactivity Cyanide

NOTE: The parameters for Herbicides and Pesticides will not be run unless there is a reason to believe it may be contaminated.

NOTE: Test parameters may be determined based on knowledge of waste and its suspected contaminants.

Table C-2

Hazardous Waste Constituents in

Containerized Waste – CSF

TABLE C-2
HAZARDOUS WASTE STORED AT THE CSF
NSWC CRANE CRANE, INDIANA

WASTE	HAZARDOUS CONSTITUENT	HAZARDOUS WASTE #
Acids, Waste	Acetic Acid Chromium Fluoboric Acid Hydrochloric Acid Lead Nitric Acid Phosphoric Acid Sodium Acid Sulfate Fluoroacetic Acid DPN Phosphate Thallium sulfate	D002/D008 D007 P058 P041 P115
Aerosols, Off-spec and defective can (propellants)	Butane Propane	D001
Bases, waste including caustic cleaners	Ammonium Hydroxide Lead Sodium Hydroxide	D002/D007/D008
Caustic cleaning	Chromium Lead Sodium Hydroxide	D002/D007 D008
Cyanide Bearing waste including some plating wastes	Potassium Thiocyanate Sodium Hydroxide Sodium Cyanide	D002/D003/F006/ F007/F008/F009
Decontamination Agent (Caustic)	Ethylene Glycol Monoethyl Ether Sodium Hydroxide	D001/D002
*Grit Blast Residue (Dust particles removed from air in abrasive sand/grit blast operations removing paint)	Cadmium Chromium Lead	D006 D007 D008
*Incineration, Demil Ash	Chromium Lead Mercury	D007/D008/ D009/D034
*Ash from open burning / open detonation operations	Lead	D008
Halogenated solvents, spent including degreasers and coolants	Dichloroethane Methylene Chloride 1,1,1-Trichloroethane Trrichloroethylene (TCE) 1,1,2-Trichloro-1,2,2-Trifluoroethane Tetrachloroethylene	F001/F002/ D040/D028/ D039
*Metallic salt contaminated waste/filtrate from sludge burning pans (non-reactive)	Arsenic Barium Cadmium Chromium Lead Mercury	D002/D004/ D005/D006/ D007/D008/ D009/D010/ D011/D035 D039

TABLE C-2
HAZARDOUS WASTE STORED AT THE CSF
NSWC CRANE CRANE, INDIANA

	Selenium Silver Methyl Ethyl Ketone Tetrachloroethylene	
Non-halogenated solvents, spent and off spec, including mineral spirits (petroleum distillates), paint thinner, and Stoddard solvent	Acetone Ethanol Isopropanol Methanol Methyl Ethyl Ketone Methyl Isobutyl Ketone Naptha Toluene Xylene	D001/F003/ F005/U154/ U220/U002/ D035
Oils, off-spec fuels, waste (some of which are ignitable)	Barium Benzene Chromium Lead	D001/D005/ D007/D008/ D018
Paint waste, including sludges, thinners, strippers, primers, and varnishes	Chromium Lead Methane, dichloro Non-halogenated solvents Cadmium	F002/D001/ D007/F003/ F005/U080/ D008
Plastic formulation, including waste and off-spec.	Ethanol Methylene Chloride Trichlorotrifluoro-methane Styrene Monomer Urethane Elastomer Toluene Diisocyanate Halogenated Solvents	D001/D002/ D003/F002
Plating and coating waste including caustic cleaning solution wastes (excluding cyanide bearing wastes)	Boric Acid Cadmium Chromic Acid Chromium Hydrofluoric Acid Lead Nitric acid Phosphoric Acid Selenium Sodium Hydroxide For Cyanide bearing (see Cyanide Wastes)	F006/D002/ D006/D007/ D008/D010/ F008
Salts, contaminated: Ammonium Nitrate Ceric Ammonium Nitrate Sodium Carbonate Sodium Nitrate Sodium Sulfide	Cadmium Chromium Lead Oxidizers	D001/D006/ D007/D008

TABLE C-2
HAZARDOUS WASTE STORED AT THE CSF
NSWC CRANE CRANE, INDIANA

Urethane contaminated wastes	Ethyl Carbamate Methylene Chloride	U233/F002
Vanadium pentoxide/titanium tetrachloride mix	Vanadium Pentoxide	D002/P120
Small arms range cleaning	Lead	D008
*Spent carbon from wastewater containing explosives (non reactive)	Lead Spent Carbon	K046/D006/D007/ D008/D009/K045
Unused or off-specification hazardous materials	2H-1-Benzopyran-2-one, 4-hydroxy-2-(3-oxo-1-phenybutyl)-, & salts, when present at concentrations greater than 0.3%	P001
	Arsenic Oxide Beryllium Powder	P012 P015
	Brucine	P018
	3-Chloropropionitrile	P027
	Copper Cyanides	P029
	Cyanides	P030
	Nicotine & salts	P075
	p-Nitroaniline	P077
	Sodium Azide	P105
	Sodium Cyanide	P106
	Acetonitrile	U003
	Aniline	U012
	Ethane,1,1'-oxybis-(1)	U025
	Epichlorohydrin	U041
	Benzene, hexahydro-(1)	U056
	Dibutyl phthalate	U069
	m-Dichlorobenzene	U070
	Dichlorodifluoromethane	U075
	Diethyl phthalate	U088
	p-Dimethylaminoazobenzene	U093
	2,4-Dimethylphenol	U101
	Dimethyl phthalate	U102
	Di-n-octyl phthalate	U107
	1,4 Dioxane	U108
	Lead Acetate	U144
	Methyl Ethyl Ketone Peroxide	U160
	Beta-Naphthylamine	U168
	Nitrobenzene	U169
	p-Nitrophenol	U170
	N-Nitrosopyrrolidine	U180
	Phthalic anhydride	U190
	Formaldehyde	U122
	2-Picoline	U191

TABLE C-2
HAZARDOUS WASTE STORED AT THE CSF
NSWC CRANE CRANE, INDIANA

Unused or off-specification hazardous materials (cont'd)	Thioacetamide	U218
	Toluenediamine	U221
	Toluene Diisocyanate	U223
	Methan, tribromo-	U225
	Trichloroethylene	U228
	Thiram	U244
	Methoxychlor	U247
	Benzenamine,2-methyl-	U328
	Ethanamine,N,N-diethyl-	U404
	Discarded, unused formulations containing tri-, tetra-, or pentachlorophenol	F027

NOTE: (1) Wastes marked with an asterisk*, indicate wastes that have been determined to not contain free-liquids.
(2) Waste constituents, numbers, and hazard codes shown for a group of chemicals do not necessarily apply to every waste in the grouping. For example, not all acids contain lead.

Table C-3

Chemical/Physical Analytical

Procedures for CSF Wastes

TABLE C-3

CHEMICAL/PHYSICAL ANALYTICAL PROCEDURES FOR WASTE CHARACTERIZATION
CENTRAL STORAGE FACILITY
NSWC CRANE
CRANE, INDIANA

Solid Matrix

Parameter	Test Method [1]	Container size/type	Hold time	Preservation
TCLP	1311			
Metals (Total)		1-Plastic Liter	6 months except Mercury	Cooled to ≤ 6° C
Antimony	7040/7041			
Arsenic	7061A/6010C			
Barium	7080/6010C			
Cadmium	6010C			
Chromium	6010C			
Lead	7420/7421/6010C			
Mercury	7471A		28 days	
Nickel	6010C			
Selenium	7741A/6010C			
Silver	6010C			
Acid Digestion	3050B			
Volatile Organics	8260B/5035A	2-4 oz. jars w/ Teflon lids	2- days 14 days preserved	Cooled to ≤ 6° C
Semi-volatile Organics	8270D	1 Liter w/ Teflon lid	7 days until extraction, 40 days after.	Cooled to ≤ 6° C

Aqueous Matrix

Parameter	Test Method [1]	Container size/type	Hold time	Preservation
TCLP	1311			
Metals (Total)		1-1 liter Plastic	6 months except Mercury	5 ml of HNO_3 & cool to < 6° C
Arsenic	7061A/6010C			
Barium	6010C			
Cadmium	6010C			
Lead	6010C			
Mercury	7471A/B		28 days	
Nickel	6010C			
Selenium	7741A/6010C			
Silver	6010C			
Ignitability	1010A	500 ml glass w/ teflon lid	30 days	Cool to ≤ 6° C
cyanide	9010C	1-1 liter Plastic	14 days	1 ml 50% NaOH & cool to ≤ 6° C
pH	9040C			Analyze immediately
Volatile Organics	8015C/8260B	2-40 ml glass w/ teflon Septum	14 days	0.1 ml of HCl & cool to ≤ 6° C
Semi-volatile Organics	8021B/8270C	1-1 liter glass with teflon lid	7 days until extraction, 40 days after	Cool to < 6° C

Notes:
(1) Methods taken from SW 846 "Test Methods for Evaluating Solid Waste Physical/Chemical Methods", 3rd edition or latest revision.

Table C-4

Parameters to be Tested – MPTS/APE/CDC

TABLE C-4

RATIONALE FOR PARAMETERS ANALYZED
MPTS, APE 1236 INCINERATOR, AND CDC WASTE RESIDUES
NSWC CRANE
CRANE, INDIANA

Wastes	Parameters	Rationale
Residue	TC (Leaching Procedure)	Generate leachate for TC characterization
Residue leachate	*TC (Arsenic)	Analyze leachate to determine if ash residues are TC for arsenic
Residue leachate	TC (Barium)	Analyze leachate to determine if ash residues are TC for barium
Residue leachate	*TC (Cadmium)	Analyze leachate to determine if ash residues are TC for cadmium
Residue leachate	*TC (Chromium)	Analyze leachate to determine if ash residues are TC for chromium
Residue leachate	TC (Lead)	Analyze leachate to determine if ash residues are TC for lead
Residue leachate	*TC (Mercury)	Analyze leachate to determine if ash residues are TC for mercury
Residue leachate	*TC (Selenium)	Analyze leachate to determine if ash residues are TC for selenium
Residue leachate	TC (2,4-dinitrotoluene)	Analyze leachate to determine if ash residues are TC for 2,4-dinitrotoluene
Residue leachate	*TC (Hexachlorobenzene)	Analyze leachate to determine if ash residues are TC for hexachlorobenzene
APE and CDC shrapnel	Reactivity	Determine by visual observation that energetic has been treated

*-Waste containing this constituent is infrequently treated. Therefore, this analysis is run only if wastes containing this constituent are treated.

TC-Toxicity Characteristic

Table C-5

Procedures for Testing Constituents

(in Table C-4) – MPTS/APE/CDC

TABLE C-5

ANALYSIS PROCEDURES
MPTS, CDC, AND APE 1236 INCINERATOR WASTE RESIDUES
NSA CRANE
CRANE, INDIANA

Wastes	Parameters	Method No.[1]
Residue	TC (Leaching Procedure)	SW-846 Method 1311
Residue leachate	*TC (Arsenic)	6010C
Residue leachate	TC (Barium)	6010C
Residue leachate	*TC (Cadmium)	6010C
Residue leachate	*TC (Chromium)	6010C
Residue leachate	TC (Lead)	6010C
Residue leachate	*TC (Mercury)	7470A
Residue leachate	*TC (Selenium)	6010C
Residue leachate	TC (2,4-dinitrotoluene)	8270D
Residue leachate	*TC (Hexachlorobenzene)	8270D

TC—Toxicity Characteristic

(*) Waste containing this constituent is infrequently treated. Therefore, this analysis is run only if wastes containing this constituent are treated.

(1) Test Methods for Evaluating Solid Waste, Physical/Chemical methods, EPA Publication SW-846 (3rd Edition or latest revision).

Table C-6

Type of Waste Materials;

MIDAS Classifications

TABLE C-6
IDENTIFICATION OF MUNITIONS TREATED AT THE MPTS, APE 1236 INCINERATOR, AND CDC
BASED UPON MIDAS FAMILIES AND DEFINITIONS FOR CONVENTIONAL MUNITIONS
NSWC CRANE
CRANE, INDIANA

Munitions Items Disposition Access System (MIDAS)					Treatment Unit[1,2,3]		
Major Family	Sub-Group Family	1st Sub Level Family	2nd Sub Level Family	DEFINITIONS	MPTS	APE 1236 Incinerator	CDC
CD				Munitions containing dyes as a primary disposal requirement. Also bulk dye materials.	X		
	CDB			Bulk Dyes: Bulk dyes used in the manufacture of munitions items or recovered from the breakdown of munitions items.			
	CDC			Cartridges Containing Dyes: Cartridges with projectiles containing dyes. Examples include blind loaded, APERS, or target practice rounds with spotting dyes		X	
	CDM			Markers Containing Dyes: Marker Munitions such as marine location markers.		X	
	CDP			Projectiles Containing Dyes: Separate loading projectiles containing dyes. Also projectiles containing dyes derived from breakdown of cartridges. Also miscellaneous items such as practice bombs using dyes as markers.		X	X
CH				Munitions containing hexachloroethane (HC) as the primary fill. Also bulk HC.	X	X	
	CHB			Containers of bulk HC or HC canisters for projectiles			
	CHC			Cartridges with projectiles containing HC			
	CHG			Grenades with HC filler, hand, or rifle.			
	CHP			Projectiles, separate loading or derived from breakdown of cartridges, containing HC.			
	CHS			Smoke Pots, land or floating, with HC filler.			
CP				Includes a variety of ammunition types that contain white phosphorus (WP), or elasticized white phosphorus (PWP) as primary fillers. Items may also contain a high explosive, bursting charge, and/or propellant charge as well.			
	CPB			Bombs, unitary and cluster, containing WP.			
	CPC			Cartridges, for guns or mortars, which contain WP, and projectiles containing felt pads.			
	CPG			Hand/rifle grenades containing WP.			
	CPP			Projectiles containing WP, without felt pads.			
	CPR			Rockets containing WP in the warheads.			
	CPRW			Rocket warheads containing WP.			
	CPZ			All munitions containing PWP.			

TABLE C-6
IDENTIFICATION OF MUNITIONS TREATED AT THE MPTS, APE 1236 INCINERATOR, AND CDC
BASED UPON MIDAS FAMILIES AND DEFINITIONS FOR CONVENTIONAL MUNITIONS
NSWC CRANE
CRANE, INDIANA

Munitions Items Disposition Access System (MIDAS)					Treatment Unit[1,2,3]		
Major Family	Sub-Group Family	1st Sub Level Family	2nd Sub Level Family	DEFINITIONS	MPTS	APE 1236 Incinerator	CDC
CR				Usually referred to as riot control agents or munitions. Includes a variety of items that contain lacrimatory or irritating agents. Common fillers are tear gas, mace, or pepper gas. Common abbreviations for irritating agents are typically shown in the item nomenclature as CS, CN, or CR.	X	X	
	CRB			Bulk Riot control agents in various types of containers.			
	CRC			Cartridges and projectiles with riot control agents as the load, 40mm and 64mm, and cartridges with launchers.			
	CRG			Grenades, hand riot.			
	CRIC			Bombs, both unitary and cluster, containing riot control agents. Also includes canister clusters for cluster bombs			
	CRM			Miscellaneous items not specifically included in CRB, CRC, CRG, and CRIC. These items range from large caliber cartridges such as 81mm and 105mm through rockets and dispensers/dispersers.			
CS				Munitions whose primary purpose is to produce smoke. This family does not include smoke-producing munitions that use white or red phosphorus, which are assigned to family CP, and those munitions containing HC, which are in family CH. This family also does not include munitions of a primarily pyrotechnic nature.	X	X	
	CSB			Bulk Smoke Mixes.			
	CSC			Cartridges, smoke, and canisters for cartridges.			
		CSCC		Canisters for cartridges, smoke.			
		CSCF		Munitions containing TS smoke.			
		CSCL		Large smoke munitions cartridges, not incinerable.			
		CSCS		Small smoke munition cartridges, incinerable.			
	CSG			Grenades, smoke, hand and rifle. Includes grenades with launchers.			
		CSGX		Bulk RP and all munitions containing RP.			
	CSL			Location markers, predominantly marine markers.			
	CSM			Miscellaneous items that do not fall into any of the other subfamilies in CS. An example is			
	CSP			Projectiles, Smoke. Also includes rocket warheads.			
		CSPC		Canisters for projectiles, smoke.			
	CSS			Signals, smoke. Includes items such as practice bomb spotting charges and various smoke signals.			

TABLE C-6
IDENTIFICATION OF MUNITIONS TREATED AT THE MPTS, APE 1236 INCINERATOR, AND CDC
BASED UPON MIDAS FAMILIES AND DEFINITIONS FOR CONVENTIONAL MUNITIONS
NSWC CRANE
CRANE, INDIANA

Munitions Items Disposition Access System (MIDAS)					Treatment Unit[1,2,3]		
Major Family	Sub-Group Family	1st Sub Level Family	2nd Sub Level Family	DEFINITIONS	MPTS	APE 1236 Incinerator	CDC
DU				Includes all ammunition items using depleted uranium as the primary material for the projectiles/penetrators. These items are typically kinetic energy projectile penetrators which may also have incendiary or tracer devices associated.			
	DUL			Larger than 30mm and individual projectiles.			
	DUM			25mm and 30mm ammunition and individual projectiles.			
	DUS			20mm ammunition and individual projectiles.			
FI				Incendiary ammunition or devices that produce intense heat for destroying equipment or documents. Primary fillers are thermite, thermate, triethylaluminum, potassium perchorate, or TPA.		X	
	FID			Destroyers/destructors, crypto equipment, document, file.			
		FIDL		Large items, 100 lbs pro-weight and greater.			
		FIDS		Small items, less than 100 lbs pro-weight.			
	FIG			Grenades.			
	FIM			Miscellaneous incendiary devices such as bombs and bulk incendiary materials or other items that do not fall into FID, FIG, or FIR.			
	FIR			Rockets, incendiary. Primarily those using TPA as the incendiary material.			
FP				Pyrotechnics/Illumination/Non-Frag/Tracers Includes a variety of ammunition types used for illumination, marking, spotting, signaling, simulating, or tracing. Typical items are ground, aircraft, or marine illumination signal stars, photoflash cartridges, personnel distress kits, and air/ground burst simulators. Does not include items whose primary purpose is to screen, which are assigned to family CS. Does			X
	FPC			Cartridges with a spotting, signaling, tracing, or illuminating role. Ranges from 40mm through 155mm			
		FPCL		105mm through 155mm inclusive, including			
		FPCM		60mm up to but not including 105mm.		X	
		FPCN		Navy 5" 50 Cal with tracer or spotting/color burst units			
		FPCS		40mm.		X	
	FPG			Grenades, illumination.		X	
	FPL			Large munitions items with DODICs beginning with L, pro-weights of 25 pounds and greater. Typical items include aircraft parachute flares and some simulators.			

TABLE C-6
IDENTIFICATION OF MUNITIONS TREATED AT THE MPTS, APE 1236 INCINERATOR, AND CDC
BASED UPON MIDAS FAMILIES AND DEFINITIONS FOR CONVENTIONAL MUNITIONS
NSWC CRANE
CRANE, INDIANA

Munitions Items Disposition Access System (MIDAS)					Treatment Unit[1,2,3]		
Major Family	Sub-Group Family	1st Sub Level Family	2nd Sub Level Family	DEFINITIONS	MPTS	APE 1236 Incinerator	CDC
		FPLC		Countermeasure flares.		X	
	FPM			Miscellaneous items which do not fall into any of the other FP subfamilies.		X	
FP (Continued)	FPP			Projectiles with an illumination, spotting, signaling, or incendiary role. Predominately			
		FPPI		Projectiles with an illumination role, larger than 5 inch.			
		FPPL		Projectiles with a spotting or signaling role, larger than 5 inch. Predominately Navy rounds with color burst units.			
		FPPS		Projectiles with an illumination role, through 5 inch. Predominately Navy 5" 38 Cal, 5" 54 Cal			
		FPPT		Projectiles with a spotting or signaling role, up to 5 inch. Predominately Navy 5" 38/54 Cal and 3" 50 Cal projectiles with color burst units.			
	FPR			Rockets and rocket warheads with an illumination, marking, spotting, or signaling role.			
	FPS			Small munitions items with DODICs beginning with L, pro-weiBght less than 25 pounds. Typical items include simulators, illumination			
		FPSC		Decoy flares and countermeasures.			
		FPSI		Illumination Munitions.		X	
		FPSS		Smoke and illumination munitions, signals, personnel distress kits, simulators, and miscellaneous items not included in FPSC and FPSI.			
HA				HE components/devices. Includes all high explosive detonators, boosters, or bursting charges that are not configured within an ammunition item. Typically hazard class/division 1.1 or 1.2 components or munitions which do not fit any other family.			X
	HAA			Items in family HA with a pro-weight less than or equal to 2 pounds.	X	X	
	HAB			Items in family HA with a pro-weight greater than 2 pounds but less than or equal to 4			
	HAC			Items in family HA with a pro-weight greater than 4 pounds but less than or equal to 6			
	HAD			Items in family HA with a pro-weight greater than 6 pounds but less than or equal to 10			
	HAE			Items in family HA with a pro-weight greater than 10 pounds but less than or equal to 15			
	HAF			Items in family HA with a pro-weight greater than 15 pounds			

TABLE C-6
IDENTIFICATION OF MUNITIONS TREATED AT THE MPTS, APE 1236 INCINERATOR, AND CDC
BASED UPON MIDAS FAMILIES AND DEFINITIONS FOR CONVENTIONAL MUNITIONS
NSWC CRANE
CRANE, INDIANA

Munitions Items Disposition Access System (MIDAS)					Treatment Unit[1,2,3]		
Major Family	Sub-Group Family	1st Sub Level Family	2nd Sub Level Family	DEFINITIONS	MPTS	APE 1236 Incinerator	CDC
HB				HE Bombs. Includes high explosive filled bombs. Items are typically air dropped, and fillers are usually tritonal, TNT, HBX, or H-6 explosives			
	HBD			Bombs normally used as donor material or demilitarized by R3 (MK 80 series bombs and M117 bombs, predominately)			
	HBM			Miscellaneous bombs other than the MK 80 series and M117 bombs. Bombs that are part of a kit or are designed for a specialized purpose. In some cases, kits may contain bombs that are designed for a specialized purpose. In some cases, kits may contain bombs that are otherwise included in the HBD; they are separated here because of the expense involved in demilitarizing the other parts of the kit. An example may be Walleye.			
HC				HE Cartridges. Includes complete artillery or navy gun ammunition with a high explosive projectile and a propelling charge. Examples are 90mm, 105mm, 3"/50 Cal, 81mm, 30mm			X
	HCC			HE Cartridges, cast explosive, less than 90mm			
		HCCL		HE Cartridges, cast explosive, of 81mm and greater but less than 90mm. Predominately			
		HCCM		HE Cartridges, cast explosive, or greater than 40mm and less than 81mm. Predominately			
		HCCS		HE Cartridges, cast explosive, of 40mm and smaller. Predominately Navy 40mm anti-			
			HCCSH	Rounds with only high explosives, no incendiary elements, and 40mm grenades.			
			HCCSI	Rounds containing incendiary elements.			
	HCL			HE Cartridges, pressed explosive, 90mm and			
	HCP			HE Cartridges, pressed explosive, less than 90mm.		X	
		HCPM		HE Cartridges, pressed explosive, larger than 40mm. Predominately Navy 3"/50 Cal.			
		HCPS		HE Cartridges, pressed explosive, of 40mm and smaller. Predominately 20mm HEI, 25mm HEI, 30mm HEI, and 40mm HEDP. Also		X	
			HCPSS	20mm ammunition.		X	
			HCPSL	Ammunition larger than 20mm up to and			
	HCS			HE Cartridges, cast explosive, 90mm and			
		HCSA		High explosive Anti-tank (HEAT) cartridges,			
		HCSF		High explosive (HE) cartridges, cast explosive.			
		HCSU		High explosive (HE) cartridges, cast explosive,			

TABLE C-6
IDENTIFICATION OF MUNITIONS TREATED AT THE MPTS, APE 1236 INCINERATOR, AND CDC
BASED UPON MIDAS FAMILIES AND DEFINITIONS FOR CONVENTIONAL MUNITIONS
NSWC CRANE
CRANE, INDIANA

Munitions Items Disposition Access System (MIDAS)					Treatment Unit[1,2,3]		
Major Family	Sub-Group Family	1st Sub Level Family	2nd Sub Level Family	DEFINITIONS	MPTS	APE 1236 Incinerator	CDC
HD				High Explosive "D". Includes all ammunition, regardless of type, that contains Explosive "D" as the primary filler. Explosive "D" is also know as ammonium picrate or Yellow "D".			
	HDB			Bulk Explosive "D".			
	HDC			Cartridges containing Explosive "D" without dye.			
		HDCD		Cartridges containing Explosive "D" and containing dye.			
	HDP			Projectiles containing Explosive "D".			
		HDPA		Projectiles with Explosive "D", 3", 5", and rocket/missile warheads.			
		HDPB		Projectiles with Explosive "D", 6".			
		HDPC		Projectiles with Explosive "D", 8".			
		HDPD		Projectiles with Explosive "D", 16".			
		HDPAD		Projectiles with Explosive "D" and dye, 5"			
		HDPBD		Projectiles with Explosive "D" and dye, 6".			
		HDPCD		Projectiles with Explosive "D" and dye, 8".			
		HDPDD		Projectiles with Explosive "D" and dye, 16".			
HE				Bulk High Explosives. Includes all bulk high explosives such as TNT, Composition A, Composition B, Composition C-4, PBX, and RDX.		X	X
HG				HE Grenades. Includes hand or rifle grenades that contain high explosive filters. Does not include 40mm grenades in family HCCSH.			
	HGN			Grenades with small amounts of explosives that would not normally be demilitarized via resource recovery. Most fragmentation grenades.		X	X
	HGR			Grenades that contain relatively large quantities of explosives that could be demilitarized by resource recovery. Mostly hand offensive grenades, MK 3 series.			X
HH				HE Depth Charges and Underwater Munitions. Includes all high explosive filled marine depth charges and underwater mines and also the separate warheads for these depth charges and underwater mines.			
	HHL			Depth charges and mines and warheads with pro-weights greater than 1300 pounds.			
	HHM			Depth charges and mines and warheads with pro-weights greater than or equal to 500 pounds, but less than or equal to 1300 pounds.			

TABLE C-6
IDENTIFICATION OF MUNITIONS TREATED AT THE MPTS, APE 1236 INCINERATOR, AND CDC
BASED UPON MIDAS FAMILIES AND DEFINITIONS FOR CONVENTIONAL MUNITIONS
NSWC CRANE
CRANE, INDIANA

Munitions Items Disposition Access System (MIDAS)					Treatment Unit[1,2,3]		
Major Family	Sub-Group Family	1st Sub Level Family	2nd Sub Level Family	DEFINITIONS	MPTS	APE 1236 Incinerator	CDC
	HHS			Depth charges and mines and warheads with pro-weights less than 500 pounds.			
HI				HE ICM/CBU & Submunitions. Includes a variety of improved and conventional munition types containing submunitions. Items may be airdropped cluster bomb units, projectiles, or warheads containing submunitions such as anti-tank mines, anti-personnel/material grenades or bomb loaded units (BLU's).		X	X
	HIC			Cluster Bombs			
		HICA		Cluster Bombs. CBU-52/58/71.			
		HICB		Cluster Bombs. CBU MK-20 Rockeye.			
		HICC		Cluster Bombs, all except those identified in HICA or HICB.			
HII				Improved Conventional Munitions			X
	HIII			ICM D501, D502, D503, D509, D514, D515.			
	HIII			16" Navy ICM			
	HIIM			155mm ICM, other than those in HIII.			
	HIIN			8" ICM.			
	HIIS			105mm ICM rounds.			
HP				HE Projectiles and Warheads. Includes all projectiles, warheads, mortars, or similar items that do not have a cartridge case, propellant, or rocket motor associated, and that contain a high explosive filler.			
	HPC			HE Projectiles with cast loaded projectiles, 155mm, 175mm and 8".			
		HPCL		8" and 175mm. non-RAP			
			HPCLR	8" RAP.			
		HPCM		Miscellaneous HE projectiles and warheads with cast loaded explosives Predominately 2.75" and 5" rocket warheads and various projectiles derived from cartridge breakdown projects			
		HPCS		155mm.			
			HPCSR	155mm RAP			
	HPP			HE projectiles with press loaded explosives. Predominately Navy 5" projectiles.			
HR				HE Rockets Includes complete rounds of rocket ammunition containing warhead, fuze and rocket motor. Note that a live rocket motor with an inert warhead would be considered a member of family PDR. This family does not include rockets with practice warheads designed			
	HRL			5" Rockets.			X
	HRM			AT-4 and SMAW rockets.			
	HRR			LAW rockets.			
	HRS			2.75" rockets.			
		HRSF		2.75" rockets with flechette warheads.			

TABLE C-6
IDENTIFICATION OF MUNITIONS TREATED AT THE MPTS, APE 1236 INCINERATOR, AND CDC
BASED UPON MIDAS FAMILIES AND DEFINITIONS FOR CONVENTIONAL MUNITIONS
NSWC CRANE
CRANE, INDIANA

Munitions Items Disposition Access System (MIDAS)					Treatment Unit[1,2,3]		
Major Family	Sub-Group Family	1st Sub Level Family	2nd Sub Level Family	DEFINITIONS	MPTS	APE 1236 Incinerator	CDC
		HRSH		2.75" rockets with HE warheads.			X
		HRSI		2.75" rockets with ICM (submunition) warheads.			X
	HRO			All other miscellaneous rockets and rockets contained in launchers.			X
H1				Torpedoes, complete.			
	HTWC			Torpedo warheads with cast explosives.			
	HTWP			Torpedo warheads with pressed explosives.			
HX				Demolition Materials. Includes all demolition materials such as cratering charges, shaped charges, flexible sheet explosives, and miscellaneous standard or non-standard items, which could be used as donor material for open detonation of other munitions items. It also includes demolition initiation items such as blasting caps, time fuze, det cord, etc. Typically, the initiation items will not be used for their intended purposes because they are in the demil account due to defects.	X	X	X
	HXD			Demolition Materials, Donor: Demo charges and other material/items, which could be used as donor material.			
	HXM			Blasting Caps, Time Fuze, Det Cord, etc., and other material in HX which would probably not be used as donor material.			
HZ				HE Land Mines. Includes all high explosive filled land mines emplaced by hand or dispersing devices, and includes the dispersing devices when the mines and the devices constitute end items. The family also includes scatterable mines when they are packed separately from the dispersing unit (e.g., a dispenser, projectile body, or other system).			X
	HZP			HE Anti-personnel Land Mines and anti-tank mines not normally used for donor material.			
	HZT			HE anti-tank land mines normally used as donor material.			
I				Inert. Includes all ammunition without any explosive or reactive material or fillers. Items in this family are typically classified as Dummy or Blind Loaded ammunition used primarily for training. In general, all munitions items that are inert but that require demilitarization before being placed in the hands of the public (e.g., sold through the DRMS) are placed in this family.		X	

TABLE C-6
IDENTIFICATION OF MUNITIONS TREATED AT THE MPTS, APE 1236 INCINERATOR, AND CDC
BASED UPON MIDAS FAMILIES AND DEFINITIONS FOR CONVENTIONAL MUNITIONS
NSWC CRANE
CRANE, INDIANA

Munitions Items Disposition Access System (MIDAS)					Treatment Unit[1,2,3]		
Major Family	Sub-Group Family	1st Sub Level Family	2nd Sub Level Family	DEFINITIONS	MPTS	APE 1236 Incinerator	CDC
LR				Large Rocket Motor. Includes solid propellant ICBM, SLBM, or space launch booster motors. Does not include those motors that are associated with tactical rocket or missile systems. Does not include anti-ballistic missile systems designed to defend against theater ballistic missiles. F202 include strategic anti-ballistic missile systems (such as Safeguard).			
	LR1			Missile motors with Hazard Class Division 1.1 propellants.			
	LR3			Missile motors with Hazard Class Division 1.3 propellants.			
N				No Family. Includes a variety of ammunition and components that cannot be identified as to filler or characteristics because of incomplete supply data.			
PR				Bulk Propellants. Includes all propellants in bulk form that are not assembled or configured to an ammunition item. Material is normally packaged in drums or metal lined wooden containers. Does not include black powder, which is assigned to family HE.	X	X	X
PC				Propellant Charges and Increments. Includes packaged propelling charges and propellant increments.	X	X	X
	PCB			Bag/Sheet Charges.			
		PCBL		Large bag charges, 16" (Navy 16" gun charges).			
		PCBM		Medium bag charges, 152mm through 8".			
			PCBMC	Medium bag charges with black powder igniter cores.			
		PCBS		Small bag charges, propelling charges, and increments, to include 105mm prop charge bags. (Predominately mortar increments and miscellaneous small propelling charges.			
	PCC			Cartridges. Propelling charges in metal cases. Predominatedly Navy 5", 6" and 8", with some 105mm. Also included is a range of clearing charges, salutes and blanks of various sizes.			

TABLE C-6
IDENTIFICATION OF MUNITIONS TREATED AT THE MPTS, APE 1236 INCINERATOR, AND CDC
BASED UPON MIDAS FAMILIES AND DEFINITIONS FOR CONVENTIONAL MUNITIONS
NSWC CRANE
CRANE, INDIANA

Munitions Items Disposition Access System (MIDAS)					Treatment Unit[1,2,3]		
Major Family	Sub-Group Family	1st Sub Level Family	2nd Sub Level Family	DEFINITIONS	MPTS	APE 1236 Incinerator	CDC
PD				Propellant Munitions/Components. Includes a variety of ammunition types such as rocket motors, some ejection seat components such as catapults or canopy thrusters, ammunition of 20mm or larger with inert (except may include tracers or incendiary mixes) or flechette projectiles, et (Flechette projectiles containing dyes are in family CD.) Typically hazard class/division 1.3 and 1.4 items.		X	
	PDL			Gun and mortar ammunition with inert projectiles or TP projectiles containing spotting charges/fuzes/boosters.			X
		PDLA		20mm, 22mm, 25mm ammunition.	X	X	
		PDLB		30mm ammunition.		X	
		PDLC		40mm AA ammunition. Predominately Navy 40mm.		X	
			PDLCC	40mm rifle grenade ammunition.		X	
		PDLD		Ammunition larger than 40mm up through and including 90mm. Includes items with tracer elements.			
			PDLDC	Chaff/leaflet rounds or TP rounds with spotting charges/fuzes/boosters.		X	
		PDLE		Ammunition larger than 90mm. Includes items with tracer elements.			
			PDLEC	Chaff/leaflet rounds or TP rounds with spotting charges/fuzes/boosters.			
		PDLF		Gun ammunition with projectiles containing flechettes.			
	PDR			Rocket Motors. Does not include strategic motors assigned to families LR1 or LR3. Does not include egress system components (many "M" DODIC's), which are in family PDS. Includes complete rockets with inert warheads, and also small rocket motors (spin/separation motors) associated with large strategic motors.			
		PDRL		Rocket motors, 5" and JATO			X
		PDRO		Other rocket motors; not in PDRL or PDRS.			X
		PDRS		Rocket motors, 2.75".			X
	PDS			Egress system components such as thrusters and catapults.		X	X
		PDSL PDSM		Items with pro-weights over 50 pounds. Items with pro-weights greater than 7 pounds and up to and including 50 pounds.			X
		PDSS		Items with pro-weights up to and including 2 pounds.		X	

TABLE C-6

IDENTIFICATION OF MUNITIONS TREATED AT THE MPTS, APE 1236 INCINERATOR, AND CDC BASED UPON MIDAS FAMILIES AND DEFINITIONS FOR CONVENTIONAL MUNITIONS

NSWC CRANE

CRANE, INDIANA

Munitions Items Disposition Access System (MIDAS)					Treatment Unit[1,2,3]		
Major Family	Sub-Group Family	1st Sub Level Family	2nd Sub Level Family	DEFINITIONS	MPTS	APE 1236 Incinerator	CDC
SA				Small Caliber Ammunition. Includes small caliber ammunition through .50 caliber.	X	X	X
	SAO			Small Caliber ammunition other than .50 caliber, all types. Typically such items as 7.62mm, .30 caliber, 5.56mm, etc., of all types.			
	SAS			.50 caliber ammunition of all types.			
		SASA		AP, API, APFT, SLAP, and SLPA-T rounds.			
		SASO		All other types of .50 caliber ammunition.			
SC				Miscellaneous and Incinerable Munitions and Components. Includes munitions and components typically assigned to hazard class/division 1.3 and 1.4 and which do not fit into any other families. Physical dimensions and weights of items in this family vary widely. Many of the items are relatively small and may be demilitarized in deactivation furnaces or other incineration methods. Typical items include small egress system components such as det cord assemblies, initiators, actuartors, etc. Also included are impulse cartridges, squibs, and delay elements. At the other end of the scale, there are many items of large physical dimensions and weights. Typical items include assemblies containing small quantities of		X	X
	SCL			Items with pro-weights over 20 pounds			
	SCM			Items with pro-weights over 5 pounds and up to and including 20 pounds.			
	SCS			Items with pro-weights up to and including 5		X	
SF				Fuzes. Includes all types of fuzes related to munitions. Examples include artillery ammunition/Navy gun fuzes, rocket fuzes, or grenade fuzes packaged spearately from the munitions			X
	SFA			Items with pro-weights up to and including 2 pounds.	X	X	
	SFB			Items with pro-weights over 2 pounds up to and including 4 pounds.		X	
	SFC			Items with pro-weights over 4 pounds up to and including 6 pounds		X	
	SFD			Items with pro-weights over 6 pounds up to and including 10 pounds.		X	
	SFE			Items with pro-weights over 10 pounds up to and including 15 pounds.			
	SFF			Items with pro-weights over 15 pounds.			

TABLE C-6
IDENTIFICATION OF MUNITIONS TREATED AT THE MPTS, APE 1236 INCINERATOR, AND CDC BASED UPON MIDAS FAMILIES AND DEFINITIONS FOR CONVENTIONAL MUNITIONS
NSWC CRANE
CRANE, INDIANA

Munitions Items Disposition Access System (MIDAS)					Treatment Unit[1,2,3]		
Major Family	Sub-Group Family	1st Sub Level Family	2nd Sub Level Family	DEFINITIONS	MPTS	APE 1236 Incinerator	CDC
HMAM				AMRAAM			
	HMAMW			Warhead.			
	HMAMG			G & C.			
	HMAMP			Propulsion Section			
	HMAMC			Components			
		HMAM-I	HMAMWI	Warhead Inert.			
			HMAMGI	G & C Inert			
			HMAMPI	Propulsion Section Inert.			
			HMAMCI	Components Inert			

1 Bold "X" in the Major Family or Sub-group Family row for the treatment unit row indicates that the treatment unit can treat all of the Sub-group Family categories.

2 Bold "X" in the Sub-family row for the treatment unit row, indicates that the treatment unit can treat that specific Sub-group Family.

3 No "X" in the treatment unit column, indicates that the treatment unit cannot treat that Major Family or Sub-group Family

APE 1236 Incinerator — Ammunition Peculiar Equipment 1236 Incinerator.
CDC — Contained Detonation Chamber
MIDAS — Munitions Items Disposition Access System.
MPTS — Mobile Plasma Treatment System.

Table D-1

Containment System Capacity Calculations

TABLE D-1

SECONDARY CONTAINMENT CAPACITY CALCULATIONS
NSWC CRANE
CRANE, INDIANA

Inside Storage Area for B-2993:

Area:

A Front Sump: 30.33'L x 1.48'W x 2.99'D = 134 ft^3 = 1,004 gal
Side Sump: 10.38'L x .98'W x 1.98'D = 20.14 ft^3 = 151 gal

Total A = 1,155 gal

B Front Sump: 15.5'L x 1.5'W x 3'D = 69.75 ft^3 = 522 gal
Side Sump: 10.4'L x 1.0'W x 2'D = 21.0 ft^3 = 157 gal

Total B = 679 gal

C Front Sump: 11.0'L x 1.5'W x 3'D = 49.5 ft^3 = 370 gal
Side Sump: 10.5'L x 1.0'W x 2'D = 21.0 ft^3 = 157 gal

Total C = 527 gal

D Front Sump: 13.0'L x 1.5'W x 3'D = 58.5 ft^3 = 437 gal
Side Sump: 10.5'L x 1.0'W x 2'D = 21.0 ft^3 = 157 gal

Total D = 594 gal

E Front Sump: 6.83'L x 1.5'W x 3'D = 31.0 ft^3 = 232 gal
Side Sump: 10.5'L x 1.0'W x 2'D = 21.0 ft^3 = 157 gal

Total E = 389 gal

F Front Sump: 15.5'L x 1.5'W x 3'D = 70.0 ft^3 = 522 gal

Total F = 522 gal

G Front Sump: 10.05'L x 1.5'W x 3'D = 45.0 ft^3 = 337 gal
Side Sump: 10.5'L x 1.0'W x 2'D = 21.0 ft^3 = 157 gal

Total G = 494 gal

TABLE D-1

SECONDARY CONTAINMENT CAPACITY CALCULATIONS
NSWC CRANE
CRANE, INDIANA

For Building 3435:

All sumps are identical in this building:

H Front Sump: 11.33'L x 1.0'W x 3.33'D = 34 ft^3 = 254 gal

Total H = 254 gal
Total I = 254 gal
Total J = 254 gal
Total K = 254 gal
Total L = 254 gal
Total M = 254 gal

Table D-2

Designators and Liquid Waste Storage Capacities

TABLE D-2
CONTAINMENT SYSTEM CAPACITY vs MAXIMUM STORAGE VOLUME
NSWC CRANE
CRANE, INDIANA

Container Storage Area	Containment System Capacity (gallons)	Maximum Storage Volume (gallons)	Percent Containment of Max. Volume
A	1,155	4,400	26.25%
B	679	1,100	61.7%
C	527	1,100	47.9%
D	594	1,100	54%
E	389	Approx. 389	100%
F	522	2,200	23.74%
G	494	1,100	44.85%
H	254	1,320	19.25%
I	254	1,320	19.255
J	254	1,320	19.25%
K	254	1,320	19.25%
L	254	1,320	19.25%
M	254	1,320	19.25%

Table I-1

Test Parameters, Container Types,

Preservation Methods - soils

TABLE I-1

TEST METHODS FOR SOIL SAMPLES
NSWC CRANE
CRANE, INDIANA

Parameter	Test Method [1]	Container size/type	Hold time	Preservation
TCLP	1311			
Metals (Total)		1-Plastic Liter	6 months except Mercury	Cooled to ≤ 6° C
Antimony	7040/7041			
Arsenic	7061A/6010C			
Barium	7080/6010C			
Cadmium	6010C			
Chromium	6010C			
Lead	7420/7421/6010C			
Mercury	7471A		28 days	
Nickel	6010C			
Selenium	7741A/6010C			
Silver	6010C			
Acid Digestion	3050B			
Volatile Organics	8260B/5035A	2-4 oz. jars w/ Teflon lids	2- days 14 days preserved	Cooled to ≤ 6° C
Semi-volatile Organics	8270D	1-Liter w/ Teflon lid	7 days until extraction, 40 days after.	Cooled to ≤ 6° C

Notes:
(1) Methods taken from SW-846 "Test Methods for Evaluating Solid Waste Physical/Chemical Methods", 3rd edition or latest revision.

Table I-2

Test Parameters, Container Types,

Preservation Methods - rinsates

TABLE I-2

TEST METHODS FOR RINSATE NSWC CRANE CRANE, INDIANA

Parameter	Test Method [1]	Container size/type	Hold time	Preservation
Ignitability	1010A	500 ml glass w/ teflon lid	30 days	Cool to ≤ 6° C
cyanide	9010C	1-1 liter Plastic	14 days	1 ml 50% NaOH & cool to ≤ 6° C
pH	9040C			Analyze immediately
Volatile Organics	8015C/8260B	2-40 ml glass w/ teflon Septum	14 days	0.1 ml of HCl & cool to ≤ 6° C
Semi-volatile Organics	8021B/8270C	1-1 liter glass with teflon lid	7 days until extraction, 40 days after	Cool to ≤ 6° C
TCLP	1311			
Metals (Total)		1-1 liter Plastic	6 months except Mercury	5 ml of HNO_3 & cool to ≤ 6° C
Arsenic	7061A/6010C			
Barium	6010C			
Cadmium	6010C			
Lead	6010C			
Mercury	7471A/B		28 days	
Nickel	6010C			
Selenium	7741A/6010C			
Silver	6010C			

Notes:
(1) Methods taken from SW-846 "Test Methods for Evaluating Solid Waste Physical/Chemical Methods", 3rd edition or latest revision.

Table I-3

Test Procedures for Explosives and

Metals - MPTS/APE/CDC

TABLE I-3

TEST METHODS FOR SOIL SAMPLES COLLECTED DURING CLOSURE
AT
MOBILE PLASMA TREATMENT SYSTE, CONTAINED DETONATION CHAMBER, AND APE 1236 INCINERATOR
NSWC CRANE
CRANE, INDIANA

Parameter	Method [1]	Sample Container Size/type	Hold time Criteria [3]	Preservation
Metals (Sb, As, Ba, Cd, Cr, Pb, Ni, Se, Ag)	Analytical SW-846 6010C	8 oz. Wide-mouth jar, Teflon-lined lid	Within 180 days	Cool to ≤ 6°C
Metals (Sb, As, Ba, Cd, Cr, Pb, Ni, Se, Ag)	Digestion SW-846 3050B			
Metals (Hg) Digestion/Analytical Method	SW-846 7471B	8 oz. Wide-mouth jar, Teflon-lined lid	Within 28 days	Cool to ≤ 6°C
Explosives[2] Extraction/Analytical Method	SW-846 8330A	8 oz. Wide-mouth jar, Teflon-lined lid	Extraction within 14 days; analysis within 40 days of extraction	Cool to ≤ 6°C

Notes:

(1)- U.S. EPA, 1986. Test Methods for Evaluating Solid Waste, Physical/Chemical Methods. SW-846, 3rd Edition or latest update.

(2)-Explosives to be analyzed 4-amino-2,6-dinitrotoluene, 2-amino-4,6-dinitrotoluene, methyl-2,4,6-trinitrophenylnitramine, 2,4,6-trinitrotoluene, nitrobenzene, 1,3-dinitrobenzene, 1,3,5-trinitrobenzene, 2,4-dinitrotoluene, 2,6-dinitrotoluene, 2-nitrotoluene, 3-nitrotoluene, 4-nitrotoluene, HMX, and RDX.

(3)- All holding times are from date of collection.

Figure C-1

Location of Units within CSF

CENTRAL STORAGE FACILITY
CONTAINER STORAGE AREAS

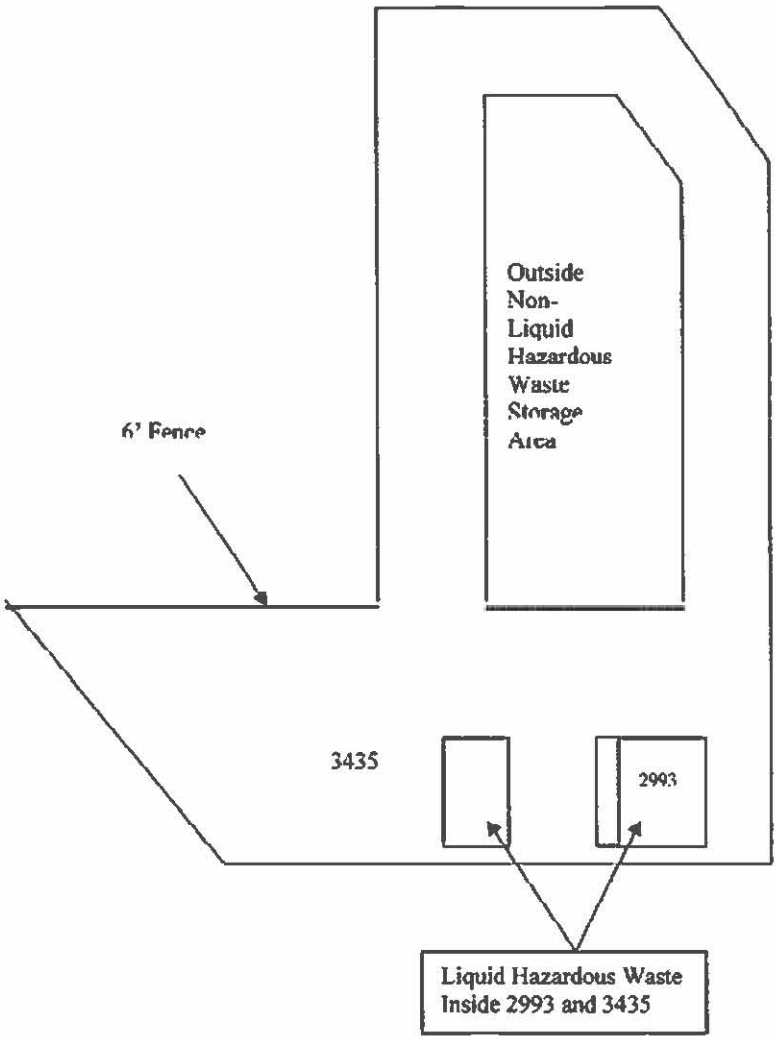

Figure D-1

Layout of Storage Facilities – CSF

CENTRAL STORAGE FACILITY AREAS
NSWC CRANE
CRANE, INDIANA

2993

Inside Liquid Hazardous Waste Storage Areas

		Drawings	Max. Containers
A	-	Exhibit B-3	80 (55-gal) drums
B	-	Exhibit B-3	20 (55-gal) drums
C	-	Exhibit B-3	20 (55-gal) drums
D	-	Exhibit B-3	20 (55-gal) drums
E	-	Exhibit B-3	Approx 77 (5-gal) or smaller containers
F	-	Exhibit B-3	40 (55 gal) drums
G	-	Exhibit B-3	20 (55-gal) drums

About 1,240 square feet of storage space. Secondary containment calculations are shown in Table D-1.

3435

Inside Liquid Hazardous Waste Storage Area

		Drawings	Max. Containers
H	-	Exhibit B-3	24 (55-gal) drums
I	-	Exhibit B-3	24 (55-gal) drums
J	-	Exhibit B-3	24 (55-gal) drums
K		Exhibit B-3	24 (55-gal) drums
L	-	Exhibit B-3	24 (55-gal) drums
M	-	Exhibit B-3	24 (55-gal) drums

About 800 square feet of storage area.

CENTRAL STORAGE FACILITY STORAGE AREAS
NSWC CRANE
CRANE, INDIANA

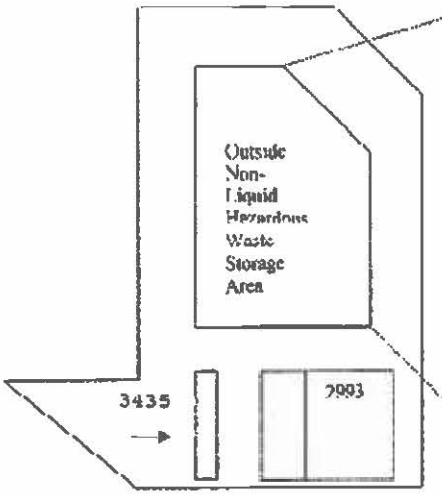

Outside Non-Hazardous Waste Storage Area

Drawings	Max. Containers
Exhibit B-2	2,208 drums

About 41,500 square feet of storage area.

Figure D-2

Process Flow Diagram – MPTS

Figure D-3

Waste and Metal Feed Handling System – MPTS

MSE Technology Applications, Inc.
P.O. Box 4078
Butte, MT 59702
(406) 494-7100
FAX (406) 494-7230

September 18, 2002 02MSE-600

Mr. Mark Benstin
Crane Army Ammunition Activity
SMACN-EDS
300 Highway 361
Building 13
Crane, IN 47522

Subject: Mobile Plasma Treatment System Waste Feeder Engineers Statement

Dear Mr. Benstin:

The enclosed MSE Technology Applications, Inc. (MSE), drawings [23A-10GA-7000, 23-10GA-7200 (Sheets 1 through 3), and 23-30ME-7200 (Sheets 1 through 6)] are to replace the MSE drawings submitted on August 13, 2002. The MSE drawings are stamped by me, Lawrence A. Hunter, Montana Professional Engineer, to confirm the technical accuracy and integrity of the MSE design, but do not address waste-specific issues.

The waste conveyor and slide gate valves are commercially available equipment and were procured based on an MSE performance specification and are to be operated well within their published operating ranges. There is no reason to believe that this equipment will not perform as intended. The ram feeder was used in earlier operations as part of a similar waste feed system with adequate performance.

One item that has not been addressed to date is the possible overpressure of the slide gate housing in the space between the two slide gate valves in the event that waste device(s) are accidentally ignited with both slide gate valves closed. This concern will be dealt with when feedrates are established for specific waste devices.

Sincerely,

Lawrence A Hunter

Lawrence A. Hunter, P.E.
Montana Professional Engineer
License Number 5724PE

Enclosures: Equipment and Operation Description
Endura-Max Vendor Drawing: APR-46926
Salina Vortex Corporation Vendor Drawings
MSE Drawings: 23A-10GA-7000, 23-10GA-7200 (Sheets 1 through 3), and 23-30ME-7200 (Sheets 1 through 6)

SALINA VORTEX® CORPORATION
3024 Arnold Avenue Salina, Kansas 67401-8105
Telephone (785) 825-7177 FAX (785) 825-7194
Home Page: www.svortex.com / e-mail: vortex@svortex.com

ASSEMBLY: HM37S24D
Installation Information
Sheet 1 of 1
SW9711

Accessory Package Unit: Solenoid Control Valve for Air Cylinder Actuator.
Model: HM375-24ES1-24VDC

Instruction:

1. Install the push-lock fittings in the front and rear ports of the air cylinder actuator.
2. Attach the Solenoid Air Control Valve Assembly to the air cylinder, or mount it in the remote vicinity of the gate valve.
3. Cut the nylon tubing to the appropriate length and push the tubing into the Air Control Solenoid and the Air Cylinder Actuator as shown.
4. The solenoid compressed air "IN" port is 3/8" NPTF. The electrical conduit boss is for 1/2-14 NPTF. Filtered and dry compressed air is recommended for industrial service in a freezing environment. 80 psig compressed air is required at the Air Cylinder for the most reliable service. Lubrication is not required but is recommended for extended wear life.

Operation:

a. Coil on Solenoid valve port "B" side. (Air "IN" to port "B")
Do-Energize, Air exhausts from port A to EXH ◇◇◇◇◇◇◇ Gate Valve is Closed
b. Coil on Solenoid valve port "B" side. (Air "IN" to port "A")
Energize-Maintain, Air exhausts from port B to EXH ◇◇◇◇◇◇◇ Gate Valve is Open

Specifications:

Valve Configuration:	2 position 4 way. (4) 3/8" NPT Ports
Solenoid Enclosure:	NEMA 4
Pressure Range:	25 to 150 psig
Flow Constant:	2.6 Cv average all ports
Lubrication:	Not required, a medium range aniline oil is recommended if lubrication is used.
Temperature:	0°F to 120°F
Electrical:	24 Volts DC Conduit Connection: 1/2" NPT
Fluid:	Air or inert gases
Leads:	#18 AWG
Coil:	General purpose, Class "A" Continuous Duty, Encapsulated
Override:	Non-Locking, Manual

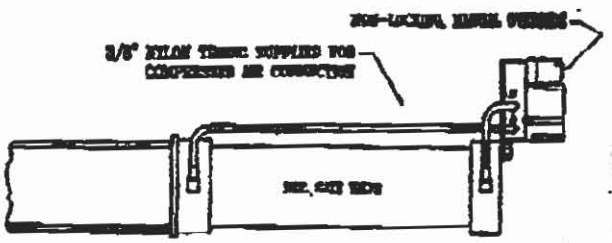

TYPICAL MOUNTING AND INSTALLATION

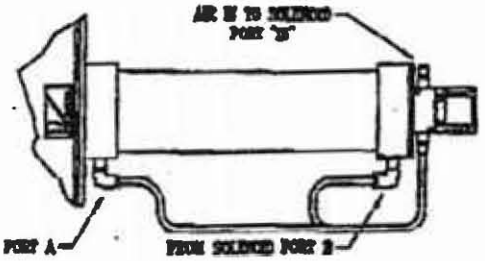

ASSEMBLY: W1 (SIZE) HMAS
GENERAL INFORMATION
SHEET 1 OF 1
AC0007

SALINA VORTEX® CORPORATION
3024 Arnold Avenue Salina, Kansas 67401-8105
Telephone (785) 825-7177 Fax (785) 825-7194
Home Page: www.svortex.com / e-mail: vortex@svortex.com

ACCESSORY PACKAGE UNIT SPECIAL SERVICE INLET FOR ROLLER GATE VALVE (STAINLESS STEEL CONSTRUCTION)
MODEL: HSS-(SIZE)

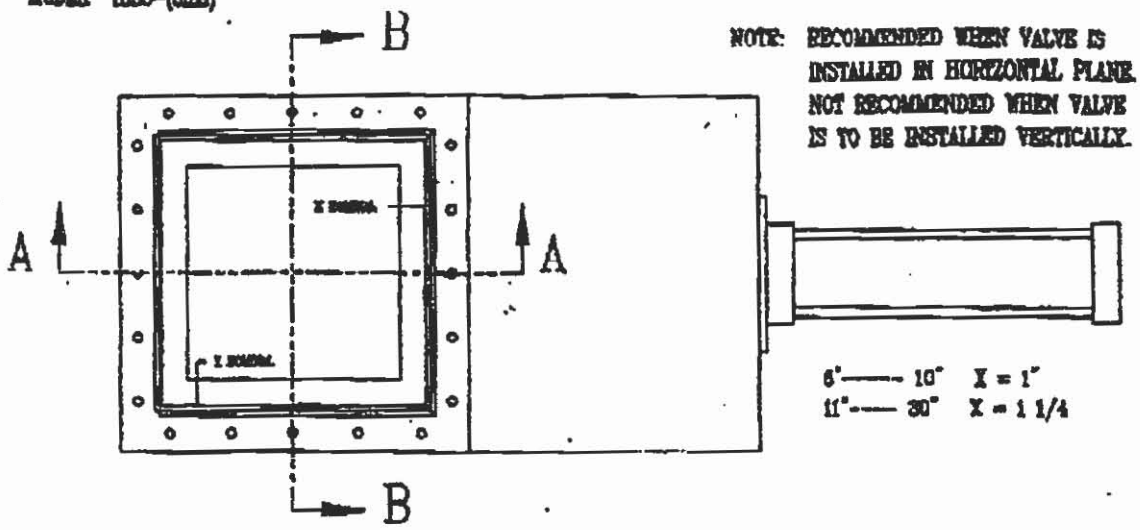

NOTE: RECOMMENDED WHEN VALVE IS INSTALLED IN HORIZONTAL PLANE. NOT RECOMMENDED WHEN VALVE IS TO BE INSTALLED VERTICALLY.

INSTALLATION:
THE CROSS SECTIONAL DRAWING DETAILS THE PLACEMENT OF THE SPECIAL SERVICE INLET IN THE ROLLER GATE. THE SPECIAL SERVICE INLET HAS A FLANGE WHICH MATCHES THE EXISTING HOLE PATTERN OF THE ROLLER GATE AND WILL ADD APPROXIMATELY 3/16" TO THE OVERALL HEIGHT OF THE VALVE.

FUNCTION:
THE SPECIAL SERVICE INLET DIRECTS THE FLOW OF THE MATERIAL TOWARD THE CENTER OF THE VALVE OPENING SUBSTANTIALLY PREVENTING MATERIAL FROM BEING SHEARED OR PACKED UPON FINAL CLOSURE OF THE GATE BLADE. MATERIAL AT THE LEADING EDGE OF THE BLADE IN THE "VOID SPACE" FALLS BENEATH THE VALVE. MATERIAL RESTING ON TOP OF THE BLADE IS PUSHED BACK ALONG THE TOP OF THE BLADE AS THE BLADE STROKES TO THE FULL CLOSED POSITION. THIS MINIMIZES SEAL WEAR WHEN HANDLING ABRASIVE, PELLETIZED OR GRANULAR MATERIALS, AND HELPS PREVENT MATERIAL PACKING WHEN THE VALVE IS REQUIRED TO CLOSE ON A COLUMN OF MATERIAL.

SPECIAL SERVICE INLET REDUCES EFFECTIVE FLOW RATE THRU THE VALVE

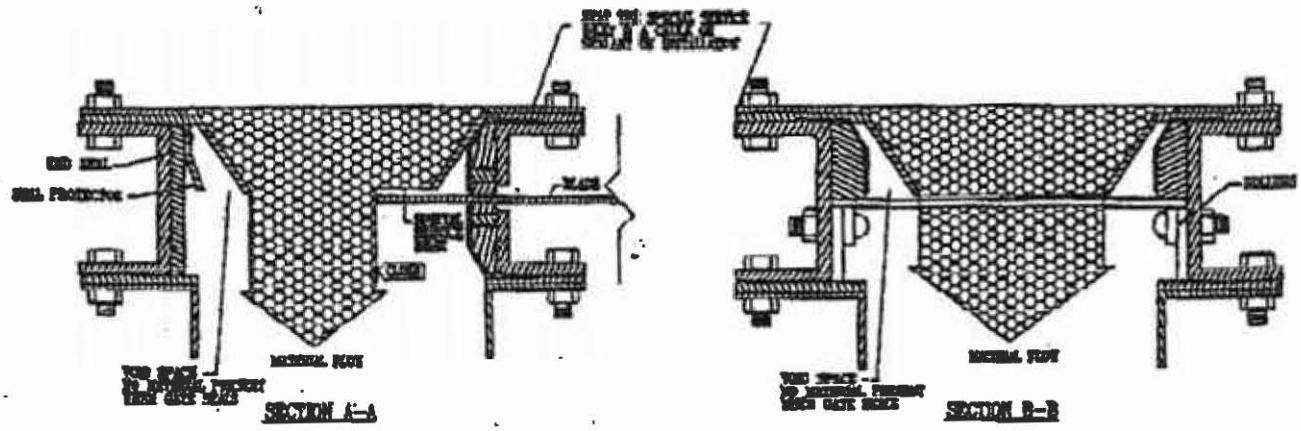

CAUTION: DO NOT ALLOW THE SPECIAL SERVICE INLET TO COME IN CONTACT WITH THE GATE BLADE.

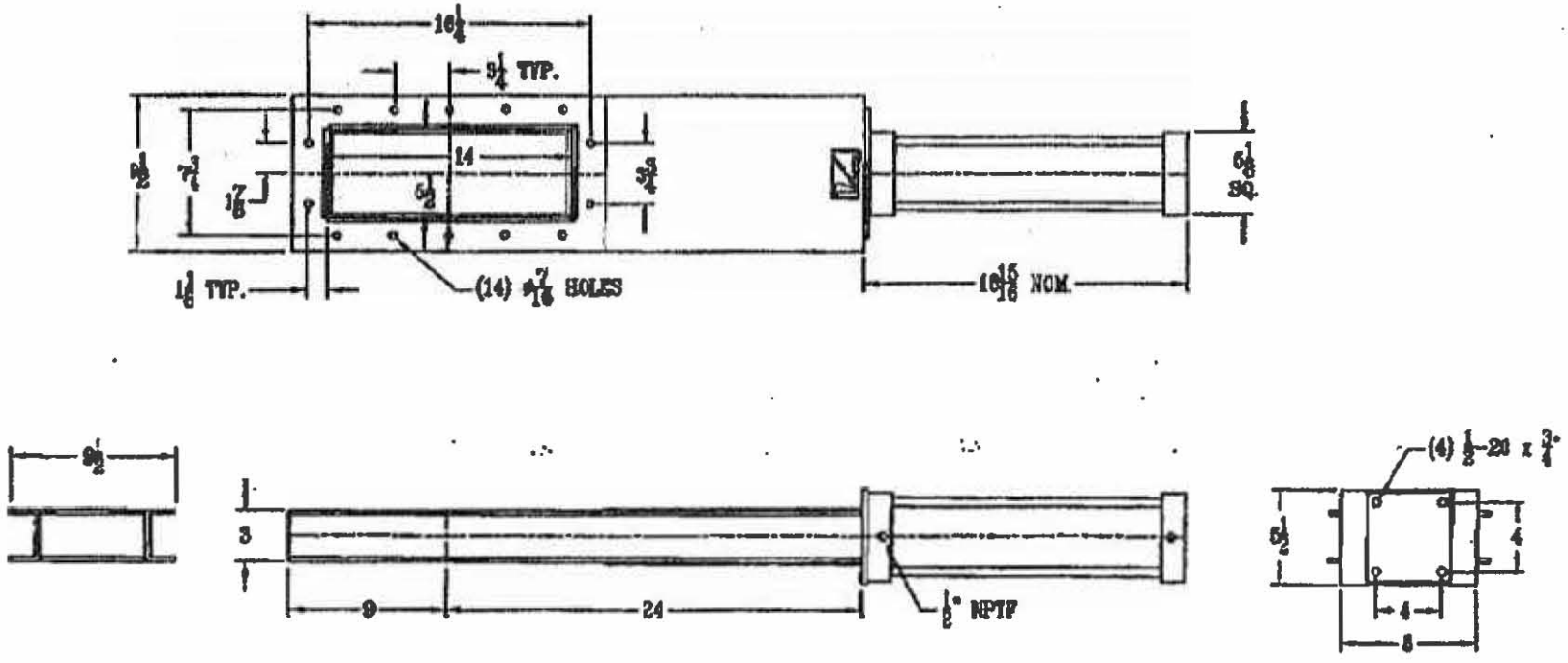

PARALLEL OF OUTLINE

VALVE MODEL NUMBER/ASSY. #:
RA14x5.5-MG-SB-RS

TOLERANCES: FRACTIONAL ±1/8 ALL ANGLES ±2° UNLESS OTHERWISE SPECIFIED

DATE:	SCALE:	REVISION:	DRAWN BY:
6-27-02	1=1	ORIGINAL	AC

THIRD ANGLE PROJECTION

SALINA VORTEX CORP.
3624 ARNOLD AVENUE
SALINA, KANSAS 67401
PHONE: (785) [illegible]

INFORMATION SUBJECT TO CHANGE WITHOUT NOTICE.

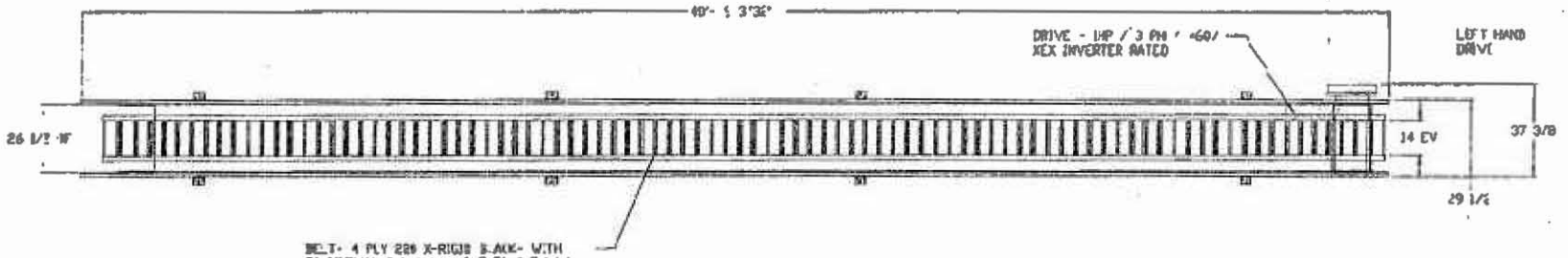

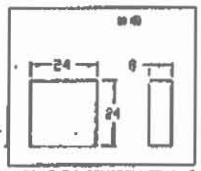

ALLEN-BRADLEY CONTROLLER & E-STOP
SHIPPED LOOSE-MOUNTING BRACKET
LOCATED AT INFEED ON RH SIDE

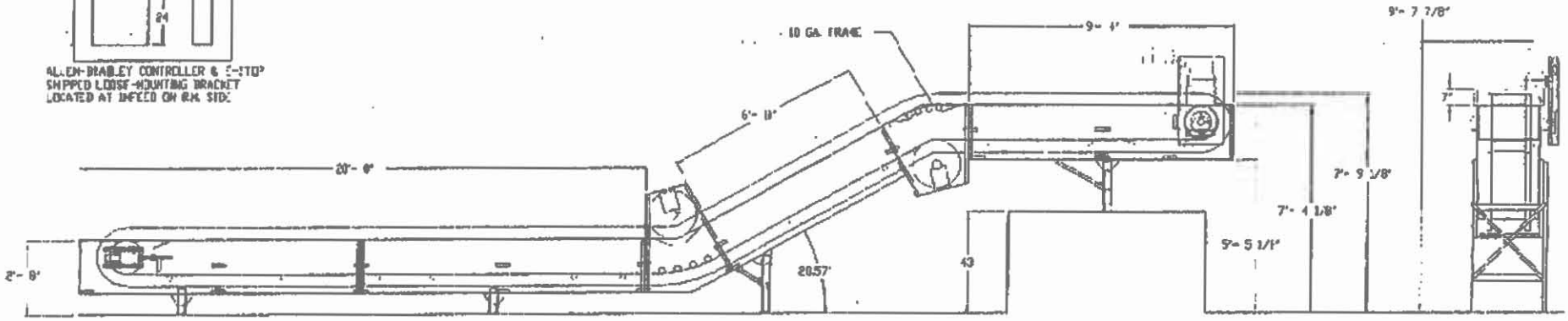

PLEASE REVIEW THE CONVEYOR DESIGN FOR ITS ABILITY TO FUNCTION PROPERLY IN YOUR INTENDED APPLICATION. SYSTEM INTEGRATION AND APPLICATION REVIEW ARE NOT THE RESPONSIBILITY OF ENDURA-MAX INC. THEREFORE, ENDURA-MAX INC. MAKES NO CLAIM AS TO THE PERFORMANCE OF THIS DESIGN FOR ANY PARTICULAR PURPOSE OF APPLICATION.

PAINT COLOR:
EPI-SAFETY BLUE

APPROVED
? AS SHOWN ? AS NOTED
CC. NAME___MSE-TA_____
SIGNATURE_Larry Hunter
DATE_____October 19, 2010

Endura-Max Inc.

JOB NO	46296
DRAWN BY:	MICHAEL DIPZINCKI
SCALE:	N/A
DATE:	05 OCT 06
REVISION:	10 OCT 11 - CHANGED MOTOR LENGTH

TITLE: MEDUIM DUTY EOCVAL SLIDER BED

DWG NO: APR-45926

WASTE LOADING BUILDING IS NOT SHOWN FOR CLARITY OF CONVEYOR SYSTEM.

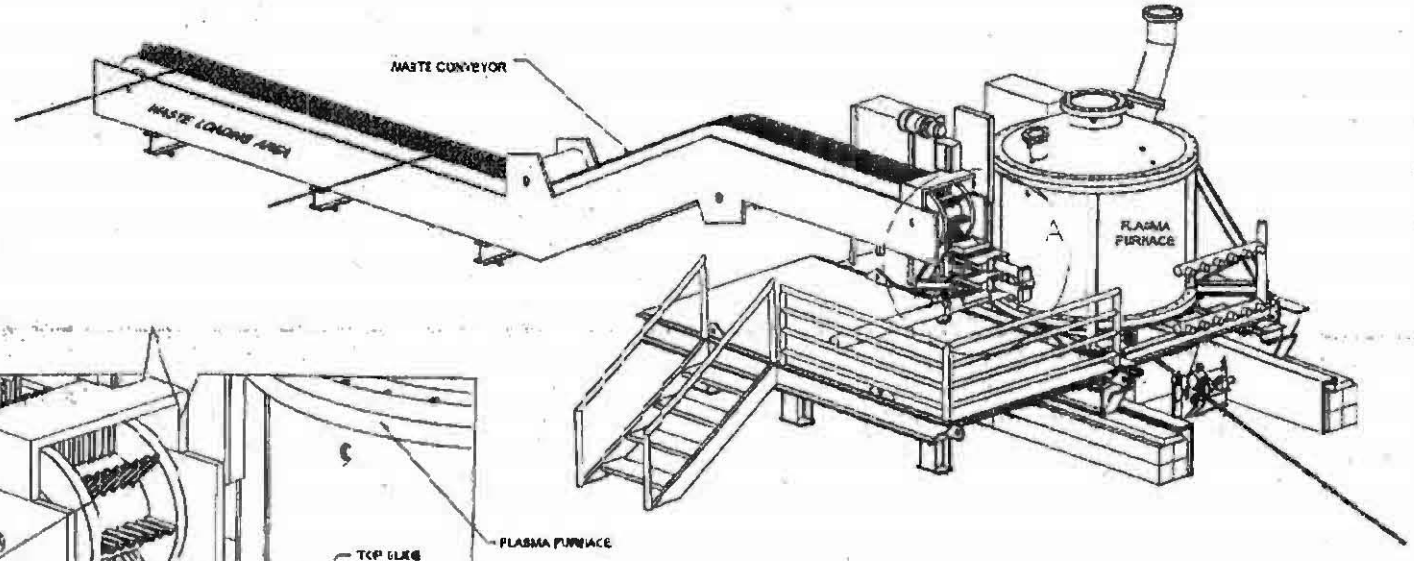

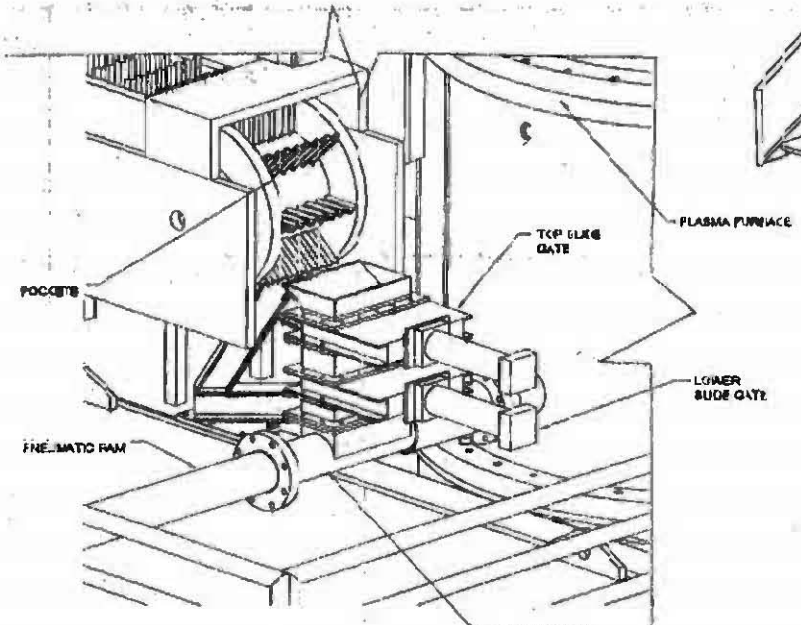

DETAIL A

DRAWING NUMBER	DESCRIPTION
23-10GA-1001	[illegible]
23-10GA-1200	[illegible]
23-10PE-7000	[illegible]

REFERENCES

REV.	RELEASE	DESCRIPTION	DRFR	CK	[illegible]	[illegible]	[illegible]
		ASBUILT			N/A	N/A	
		ASBUILT			N/A	N/A	
		ASBUILT			N/A	N/A	
		ASBUILT			N/A	N/A	
—		[illegible]	[illegible]	—	— N/A	N/A	—
H		[illegible]	[illegible]	—	— N/A	N/A	—

REVISIONS

[illegible]

[illegible]

TITLE [illegible]

23A-10GA-1001

SCALE NONE

SHEET 1 OF 1

DATE PLOTTED [illegible]

TIME PLOTTED [illegible]

PLOTTED BY [illegible]

www.[illegible].com

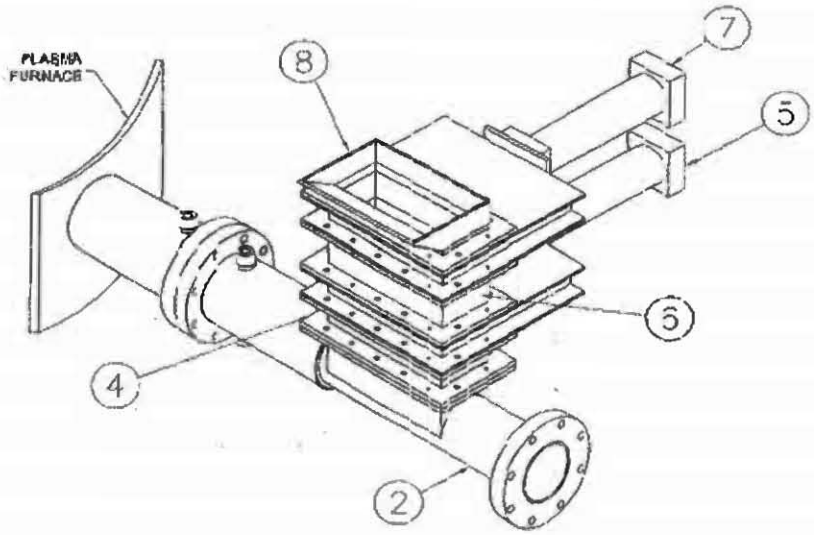

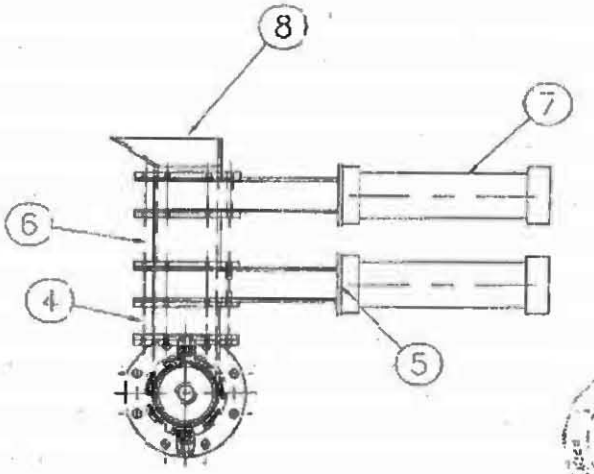

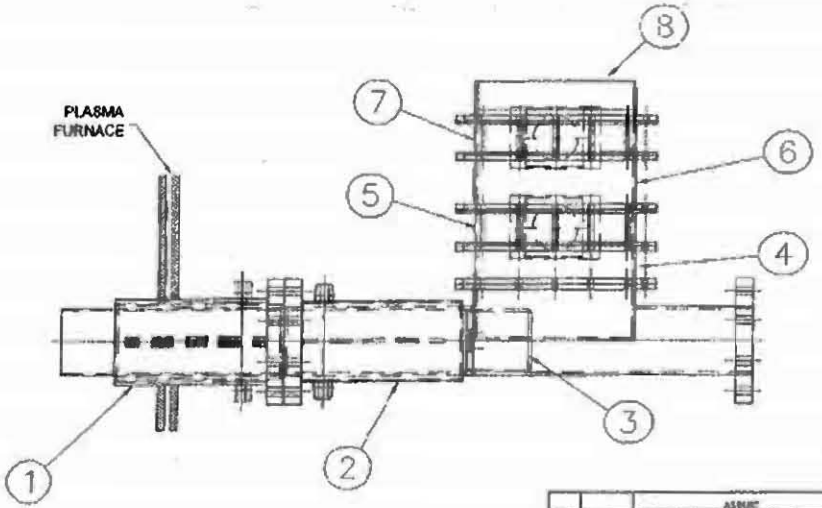

ITEM	QTY	NAME	MATERIAL	VENDOR
8	1	HOPPER	SUB--ASSEMBLY	MSE
7	1	TOP SLIDE GATE	SUB--ASSEMBLY	SALINA VORTEX
6	1	TOP TRANSITION	SUB--ASSEMBLY	MSE
5	1	LOWER SLIDE GATE	SUB--ASSEMBLY	SALINA VORTEX
4	1	LOWER TRANSITION	SUB--ASSEMBLY	MSE
3	1	PLUNGER	SUB--ASSEMBLY	MSE
2	1	FEED TUBE ASSEMBLY	SUB--ASSEMBLY	MSE
1	1	6" WATER COOLED FLANGE / FURNACE INTERFACE	SUB--ASSEMBLY	MSE

Parts List

DRAWING NUMBER	DESCRIPTION
23-MGA-7210	ASSEMBLY & HEMS
23-MGA-7000	MAGE FEED SYSTEM
23-MGA-7001	FEEDING SYSTEM ASSEMBLY

REFERENCES

REV.	RELEASE	REVISIONS	DATE	CK
		ASBUILT	N/A	N/A
		ASBUILT	N/A	N/A
		ASBUILT	N/A	N/A
		ASBUILT	N/A	N/A
		INSTALLATION	N/A	N/A
		INSPECTION	N/A	N/A

APPROVALS

23-MGA-7200

CHRDF - www.rdfe.com

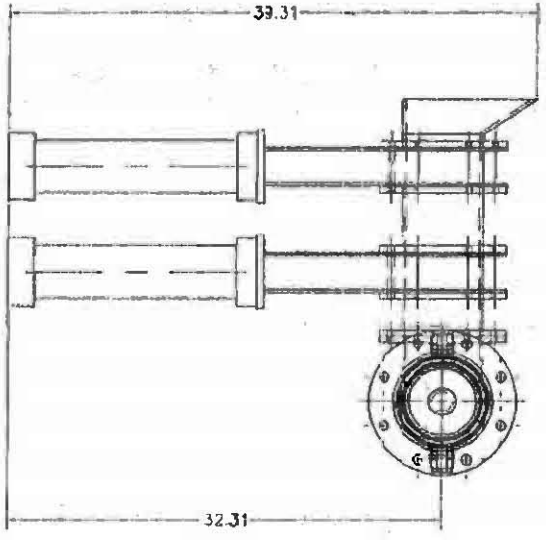

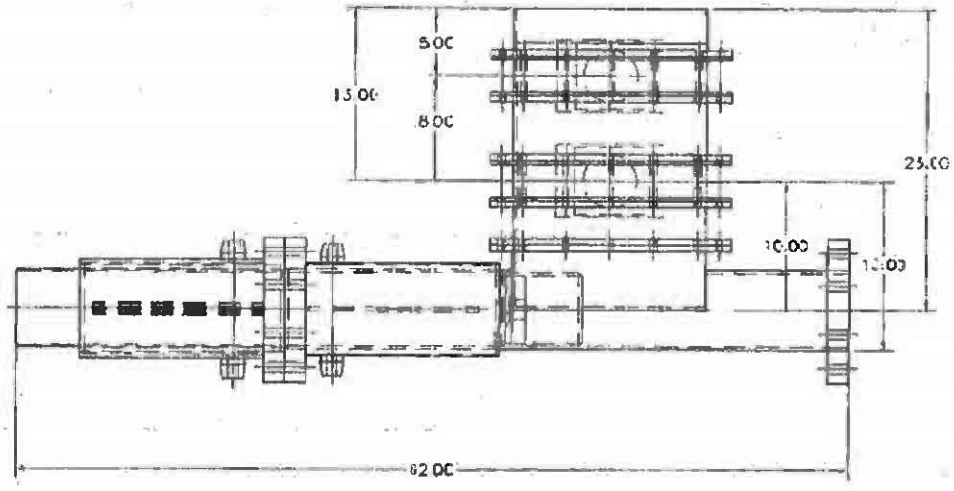

DRAWING NUMBER	DESCRIPTION
23-[illegible]	ASSEMBLY & DETAILS
23-[illegible]	MASTER [illegible]
23-[illegible]	[illegible]

REFERENCES

REV.	RELEASE	DESCRIPTION	DRTR	CK	[illegible]
		ASSM.			N/A
		ASSM.			N/A
		ASSM.			N/A
		ASSM.			N/A
		INSTALLATION			N/A
		[illegible]			N/A

REVISIONS

APPROVALS

TITLE

27-[illegible]-7100

SCALE

SHEET

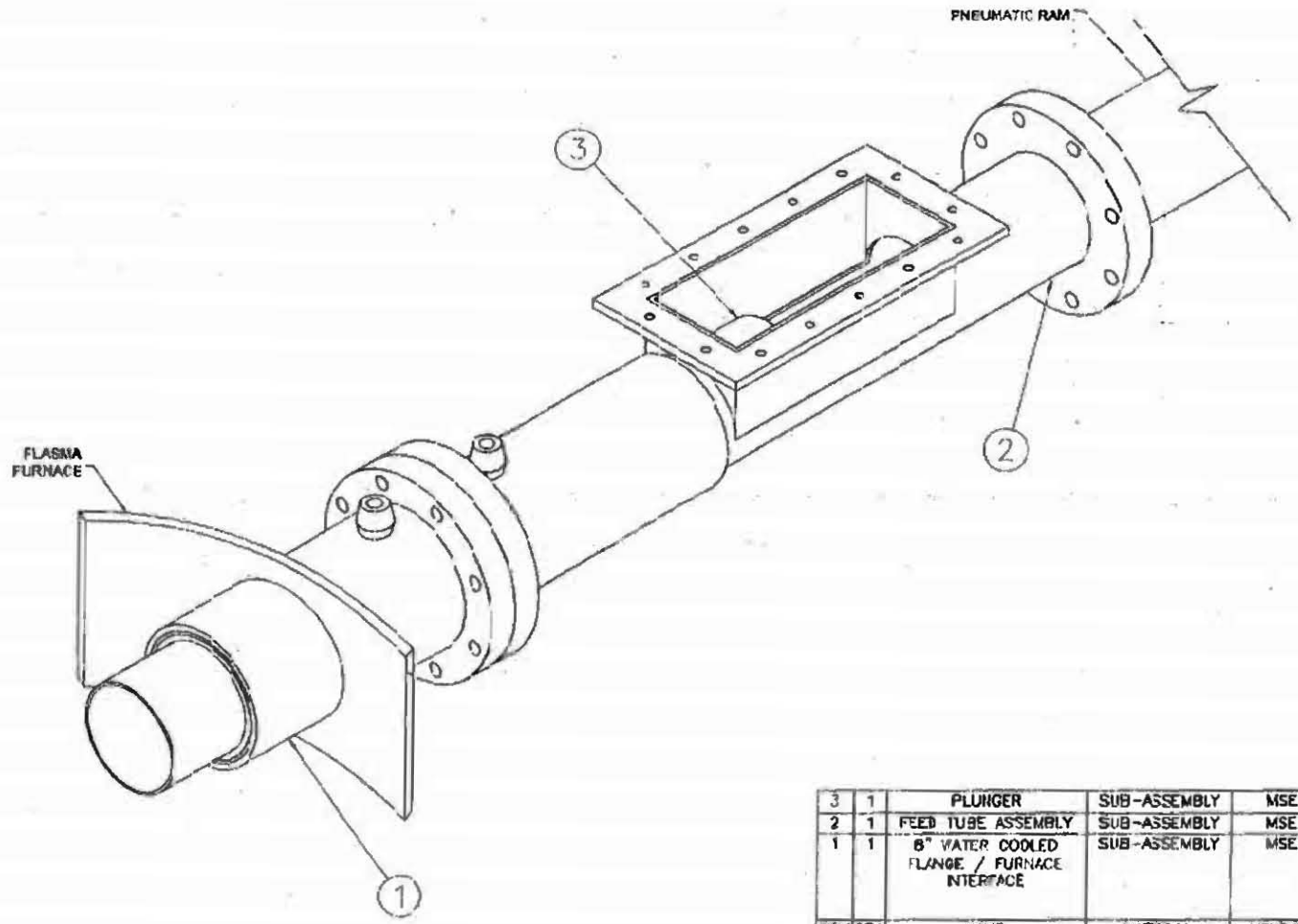

ITEM	QTY	NAME	MATERIAL	VENDOR	NOTE
3	1	PLUNGER	SUB-ASSEMBLY	MSE	
2	1	FEED TUBE ASSEMBLY	SUB-ASSEMBLY	MSE	
1	1	8" WATER COOLED FLANGE / FURNACE INTERFACE	SUB-ASSEMBLY	MSE	ONLY USED IN DRAWINGS FOR REFERENCE

Parts List

DRAWING NUMBER	DESCRIPTION
23-30FE-1000	ASSEMBLY & DETAILS
23-100A-1000	MASTER MODEL
23F-100A-1001	MODEL SELF ASSEMBLY

REFERENCES

REV.	REMARK	DESCRIPTION	DRN	CK	ENGR	DOD P MGR	C. ENG
		AS FAB.				N/A	N/A
		AS FAB.				N/A	N/A
		AS FAB.				N/A	N/A
		AS FAB.				N/A	N/A
-		INSTALLATION	MDM	-	-	N/A	N/A
-		REFERENCE REVIEW	MDM	-	-	N/A	N/A

REVISIONS

23-30GA-7100

CONPDF www.tradeicon

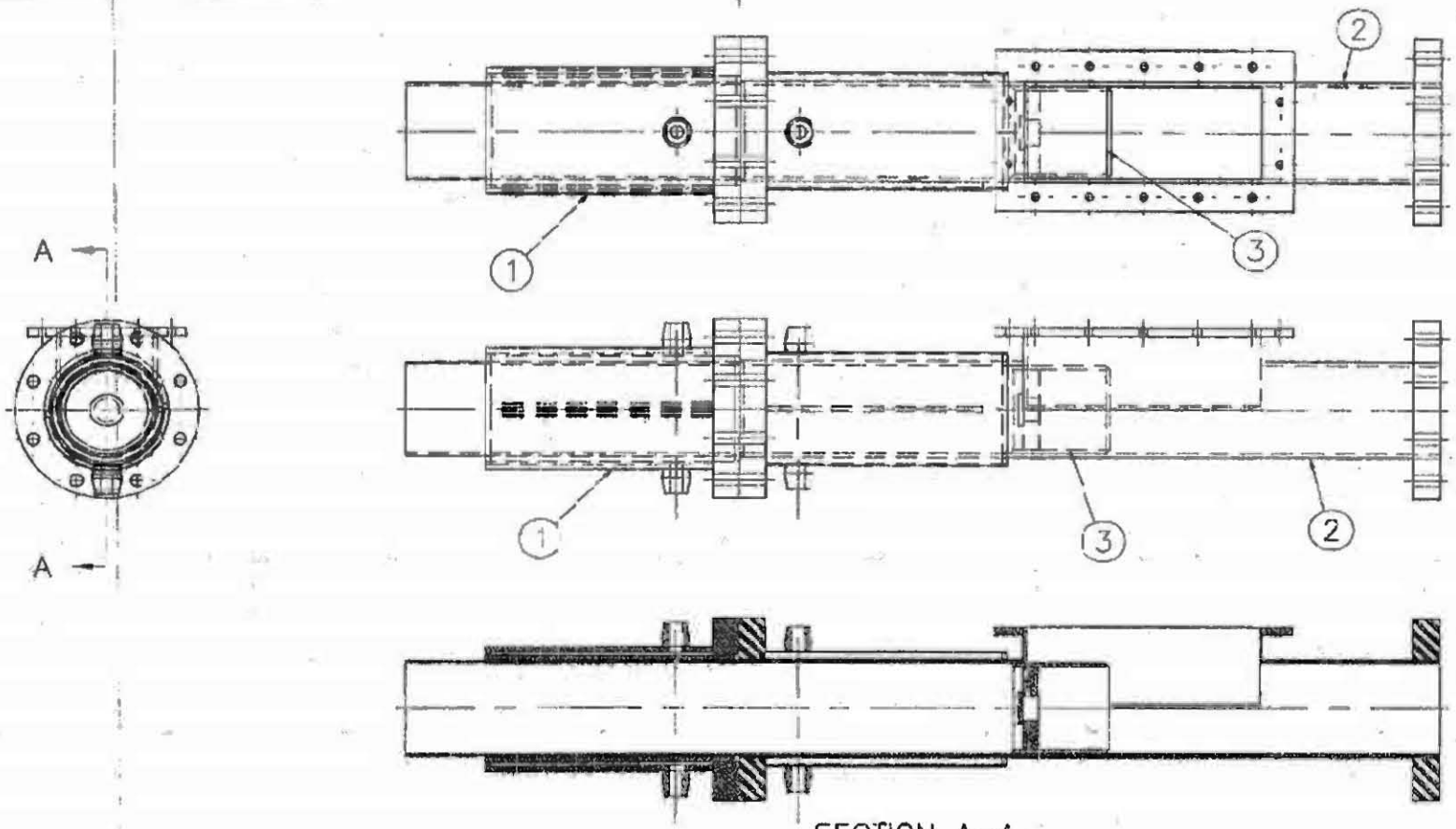

SECTION A-A

ITEM	QTY	NAME	MATERIAL	VENDOR	NOTE
3		PLUNGER	SUB-ASSEMBLY	MSE	
2		FEED TUBE ASSEMBLY	SUB-ASSEMBLY	MSE	
1		6" WATER COOLED FLANGE / FURNACE INTERFACE	SUB-ASSEMBLY	MSE	ONLY USED IN DRAWINGS FOR REFERENCE

Parts List

REV.	RELEASE	DESCRIPTION	BY	CK
		AS BUILT		
		AS BUILT		
		AS BUILT		
		AS BUILT		
		INSTALLATION/ACCEPTANCE	MSM	
		NEW DESIGN REVIEW	MSM	

REVISIONS

DRAWING NUMBER	DESCRIPTION
23-[illegible]	[illegible]
23-[illegible]	[illegible]
23A-[illegible]	[illegible]

REFERENCES

23-31MI-7100

Clibe PDF - www.fastio.com

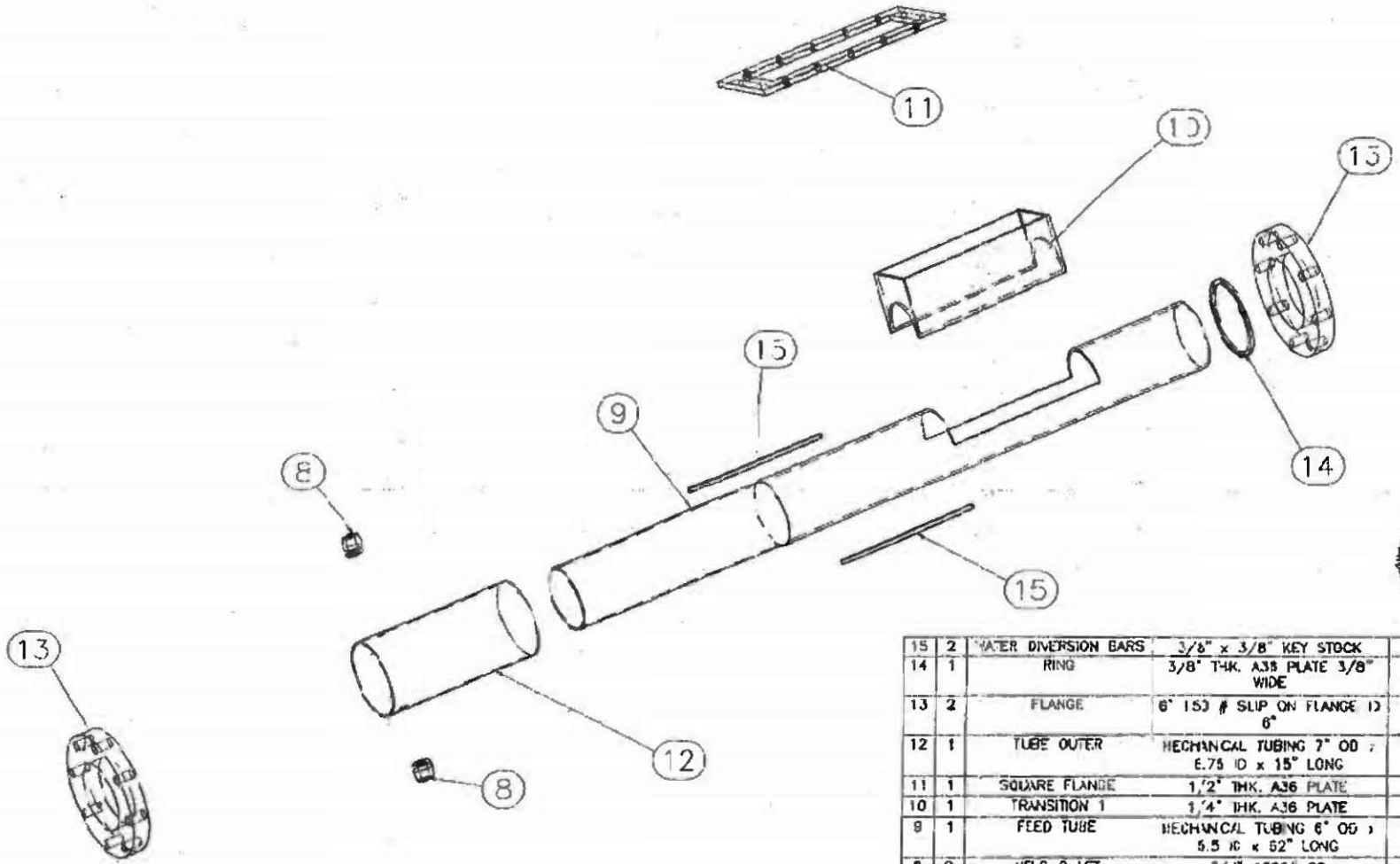

ITEM	QTY	NAME	MATERIAL	VENDOR
15	2	WATER DIVERSION BARS	3/8" x 3/8" KEY STOCK	MSE
14	1	RING	3/8" THK. A36 PLATE 3/8" WIDE	MSE
13	2	FLANGE	6" 150 # SLIP ON FLANGE ID 6"	MSE
12	1	TUBE OUTER	MECHANICAL TUBING 7" OD x 6.75 ID x 15" LONG	MSE
11	1	SQUARE FLANGE	1/2" THK. A36 PLATE	MSE
10	1	TRANSITION 1	1/4" THK. A36 PLATE	MSE
9	1	FEED TUBE	MECHANICAL TUBING 6" OD x 5.5 ID x 52" LONG	MSE
8	2	WELD O LET	3/4" 150C# CS	MSE

Parts List

DRAWING NUMBER	DESCRIPTION
23-10Gs-7000	WASTE FEED BA
23-10Gs-7100	WELMENTE SEC 6"
23A-10KA-1001	GENERAL SOLAMANE/BAT

REFERENCES

REV.	RELEASE	DESCRIPTION	DRTR	CK	DATE	P. ENG	L. ENG	S. ENG
		AS BUILT				N/A	N/A	
		AS BUILT				N/A	N/A	
		AS BUILT				N/A	N/A	
		AS BUILT				N/A	N/A	
—		INTERLAGRAMS 7 & 8	MSM	—	—	N/A	N/A	—
—		INTERIM REVIEW	MSM	—	—	N/A	N/A	—

REVISIONS

AUTOMATIC

MS 7304

23-HME-7000

CWFOF - www.fortio.com

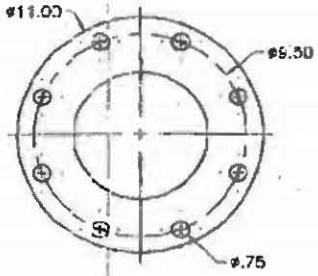

PART # 13
2 REQUIRED

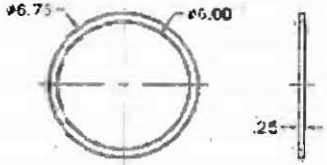

PART # 14
1 REQUIRED

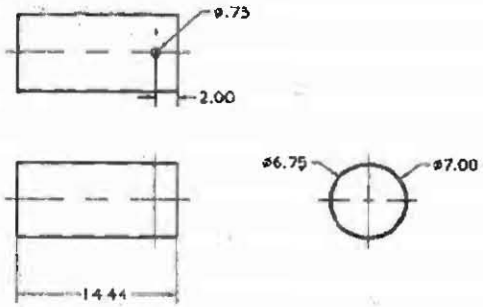

PART # 12
1 REQUIRED

PART # 15
2 REQUIRED

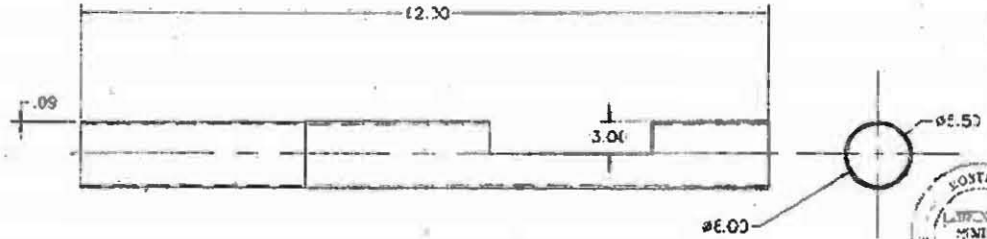

PART # 9
1 REQUIRED

DRAWING NUMBER	DESCRIPTION
REFERENCES	

REV	RELEASE	DESCRIPTION	DRN	CK	APPR	P. DIS	P. MIS	C. DIS
		ALBUT				NA	NA	
		ALBUT				NA	NA	
		ALBUT				NA	NA	
		ALBUT				NA	NA	
		MS AUATES 2/6/2-8/7/5	MDM	–	–	NA	NA	–
		DIS DESIGN REVIEW	MDM	–	–	NA	NA	–

REVISIONS

23-10MI-1201

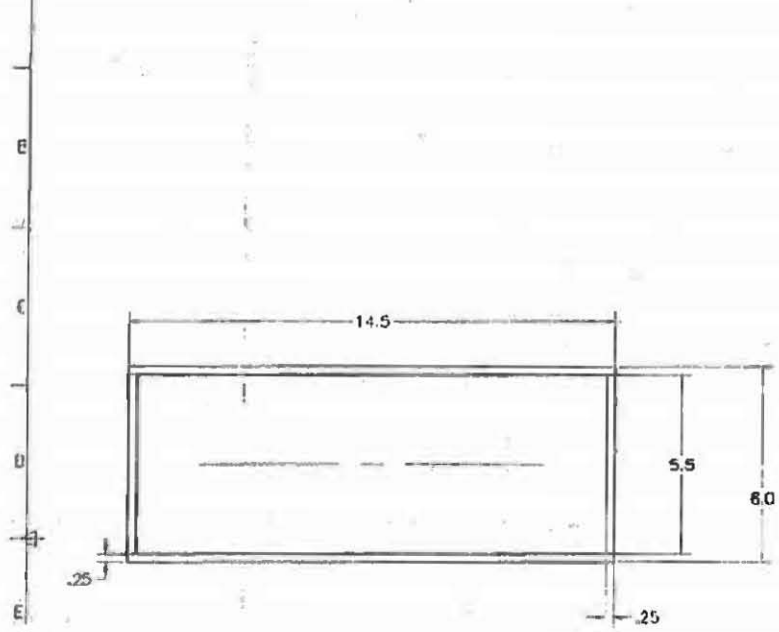

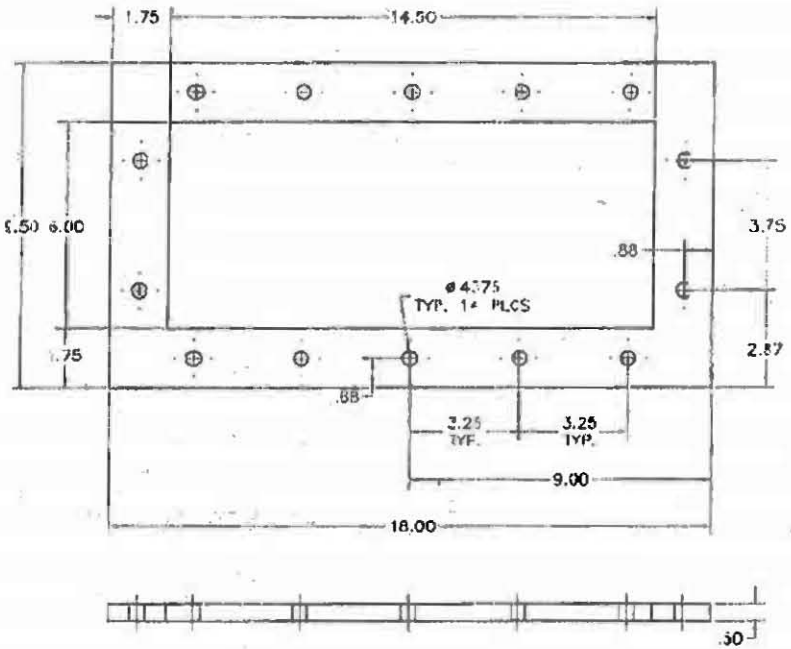

PART # 11
6 REQUIRED
1/2" THK. A36 PLATE

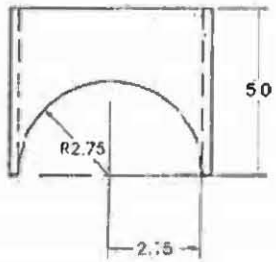

PART # 10
1 ASSEMBLY
REQUIRED
1/4" THK. A36 PLATE

DRAWING NUMBER	DESCRIPTION
23-08EA-7086	[illegible]
23-08EA-7088	[illegible]
23-10EA-7091	[illegible]

REFERENCES

REV.	RELEASE	DESCRIPTION	DR'N	CK	[illegible]
		AS NOTED			
		AS NOTED			
		AS NOTED			
		AS NOTED			
—		PRELIMINARY SOFT-RELEASE	MEP	—	
A1		PRE DESIGN REVIEW	ADH	—	

REVISIONS

23-30ME-7100

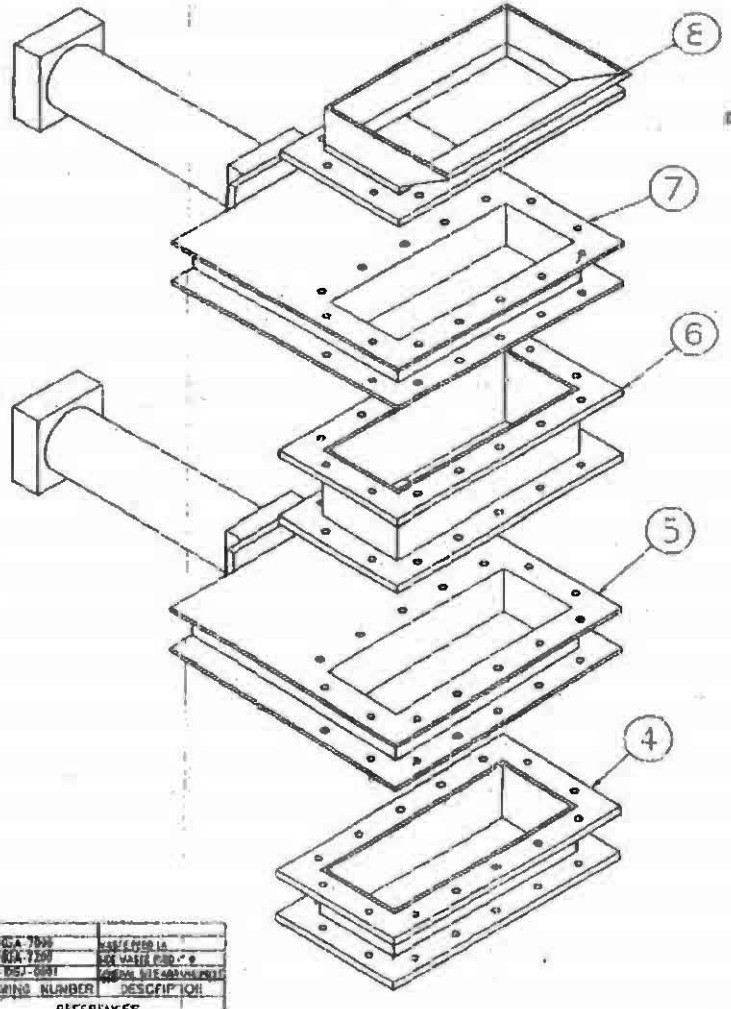

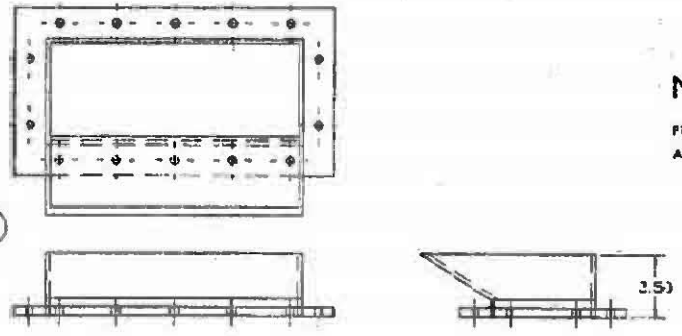

SUB-ASSEMBLY # 8
1 REQUIRED

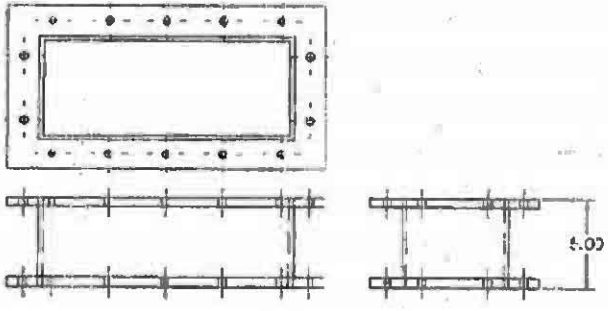

SUB-ASSEMBLY # 6
1 REQUIRED

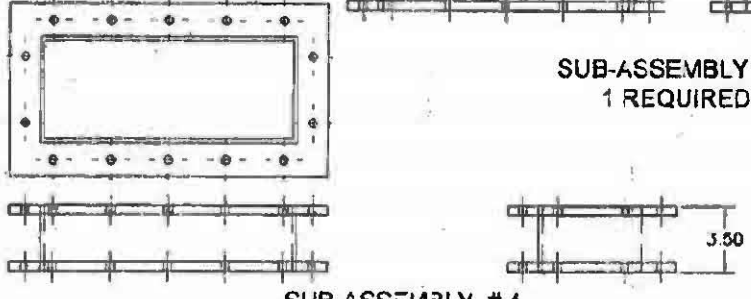

SUB-ASSEMBLY # 4
1 REQUIRED

NOTE:

FLANGES TO BE ±1/16" AFTER ASSEMBLY AND WELDING.

DRAWING NUMBER	DESCRIPTION
21-06A-7000	[illegible]
21-06A-7200	[illegible]
21A-06J-0001	[illegible]

REFERENCES

REV.	RELEASE	DESCRIPTION	BY	CK	ENGR	DWN	APP	DATE
		AS BUILT				N/A	N/A	
		AS BUILT				N/A	N/A	
		AS BUILT				N/A	N/A	
		AS BUILT				N/A	N/A	
		AS BUILT				N/A	N/A	
		[illegible]	[illegible]	--	--	N/A	N/A	--
		[illegible]	[illegible]	--	--	N/A	N/A	--

REVISIONS

23-30ME-'20

SCALE [illegible] SHEET 1 OF 1

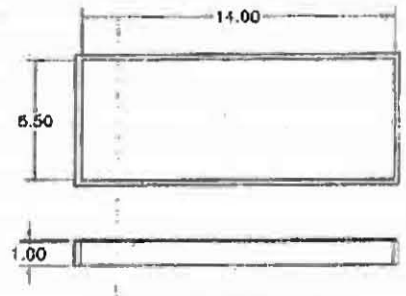

SUB-ASSEMBLY # 7A
1 REQUIRED

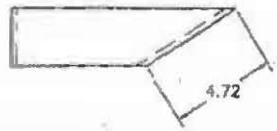

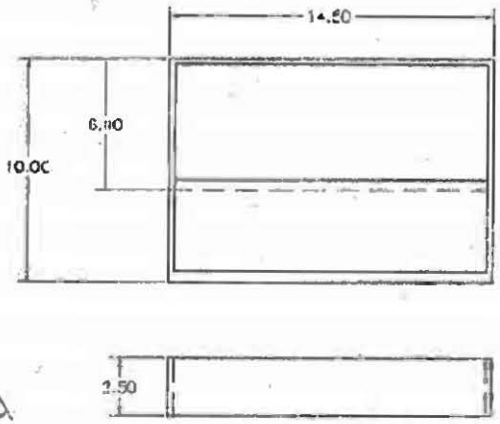

SUB-ASSEMBLY # 7B
1 REQUIRED

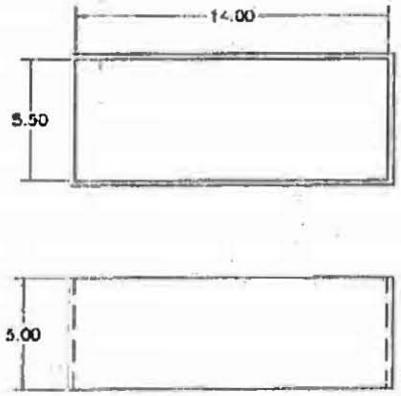

SUB-ASSEMBLY # 6
1 REQUIRED

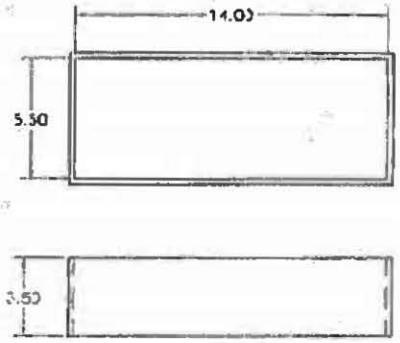

SUB-ASSEMBLY # 4
1 REQUIRED

1/4" THK. A36 PLATE

DRAWING NUMBER	DESCRIPTION
21-003A-7090	MASTER FEED VIA
21-003A-7240	SIDE MASTER FEED
21A-00A-0001	MATERIAL SET ARRANGEMENT

REFERENCES

REV.	DESCRIPTION	REVISIONS

23-3010-7100

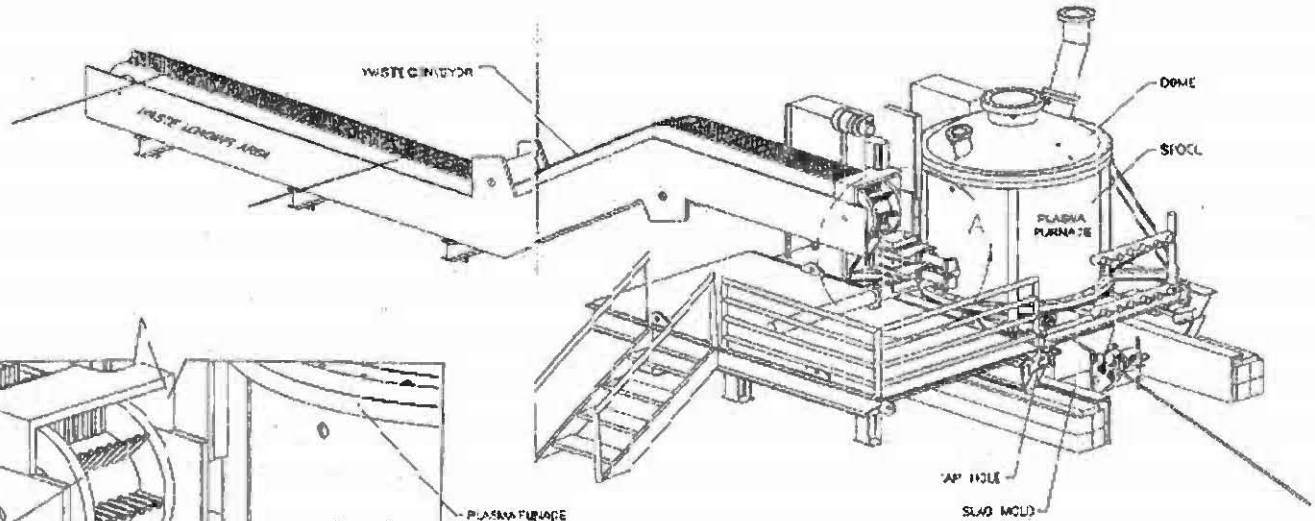

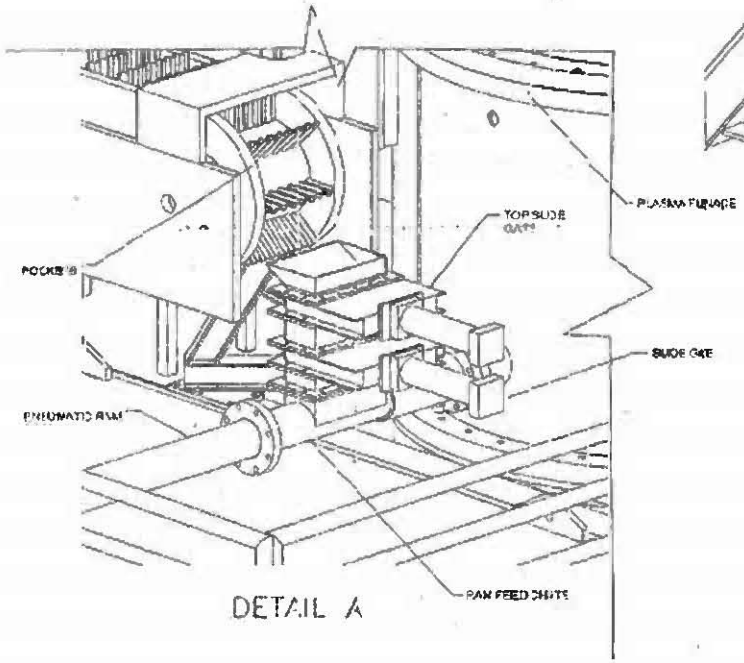

DRAWING NUMBER	DESCRIPTION
13-103A-7000	WASTE FEED 6A
13-103A-7200	SOIL HANDLING P. &
13-103A-7300	ASSEMBLY & DETAILS

REFERENCES

REV. RELEASE	DESCRIPTION	DATE	DR	PLANNER	PM	DESIGN	C. ENG
A	[illegible]						
4/29/03	REV. FOR CONSTRUCTION						
4/10/01	WORK REVIEW						

REVISIONS

13A-103A-7000

A

WASTE LOADING BUILDING AND WASTE CONVEYOR ARE NOT SHOWN FOR CLARITY.

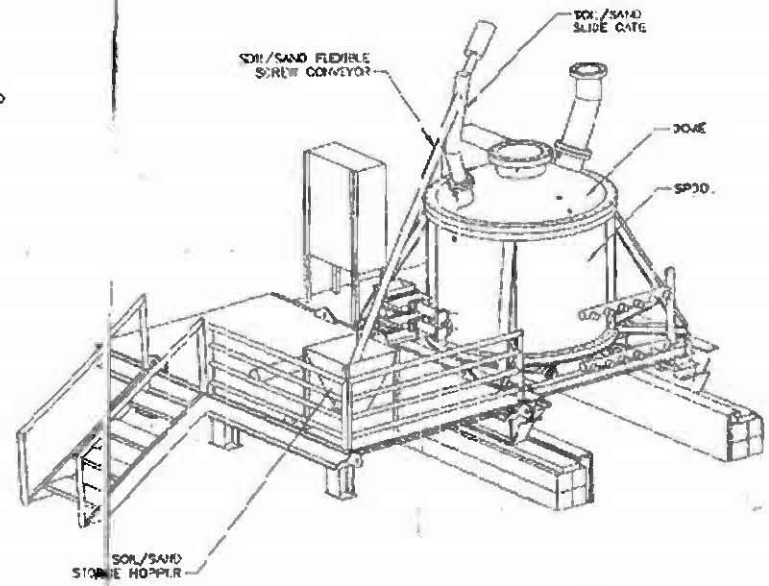

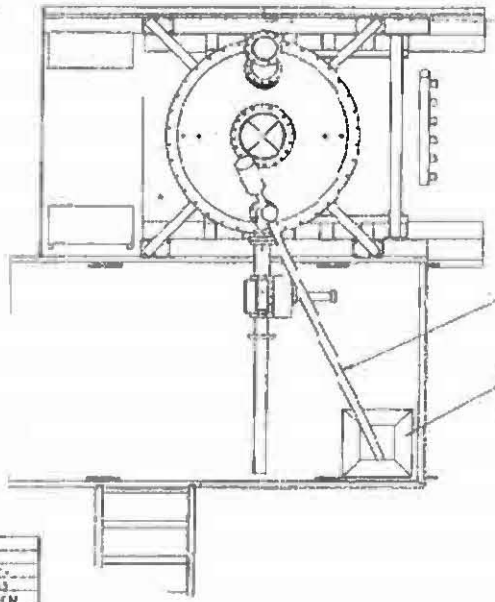

DRAWING NUMBER	DESCRIPTION
23-0000-7001	MECHANICAL
23-0000-7001	MECHANICAL
23-0000-7001	MECHANICAL DETAILS

REFERENCES

REV	REVISIONS
A	

23A-7000-7000

Figure D-3.1

Waste Feed Modifications Drawings - MPTS

Technology Applications, Inc. 200 Technology Way, P.O. Box 4078 Butte, MT 59702 406.494.7100

www.mse-ta.com

Engineering Solutions

2011MSE-033

October 7, 2011

Dan Flynn
U.S. Army ARDEC
Bldg 321
AMSRD-AAR-AEE-P
Picatinny Arsenal, NJ 07806-5000

Subject: Modifications to the Mobile Plasma Treatment System Waste Feeder Engineer's Statement

Dear Dan:

Modifications to the Mobile Plasma Treatment System (MPTS) waste feeder eliminate the potential for plugging at the entry point to the primary chamber and improve fugitive emissions control. The proposed modifications eliminate the previous feed ram and replace it with a gravity feeder. The gravity feeder elevates the existing waste weight cell, as well as both upper and lower slide gate isolation valves. Once weighted and passed through the double gate valves, waste falls via gravity through a vertical, water cooled feed chute and enters the primary chamber at the top of the chamber. The feed conveyor has also been modified to accommodate repositioning of the weight cell and slide gate assemblies.

The attached diagrams document the proposed changes. The 3D solid rendering shows the overall proposed configuration and relocated weight cell and feed chute. Also included are engineering drawings of the modified Endura-Veyor feed conveyor, weigh cell and slide gate support stand, and the new water-cooled feed chute. The proposed conveyor is similar to the existing unit except that the center inclined section has been expanded to support new discharge height requirements. The support stand supports the weigh cell and both slide gate valves. The feed chute mounts between the top of the primary chamber and the bottom of the lower slide gate valve. The lower half of the feed chute, which is exposed to the primary chamber, is double walled and water cooled.

The attached diagrams and drawings accurately reflect the proposed changes to the MPTS waste feed system.

Sincerely,

Jeffery W. Raffner, P.E.
President and CEO

KDF/JWR/mk

Enclosures:

3D Solid Model Proposed Feeder Configuration
Endura-Veyor Vendor Drawing: 46926/76017
MSE Drawing: 23AS-10ME-9800000-01
MSE Drawing: 23AS-10ME-1117, Sheets 1-3

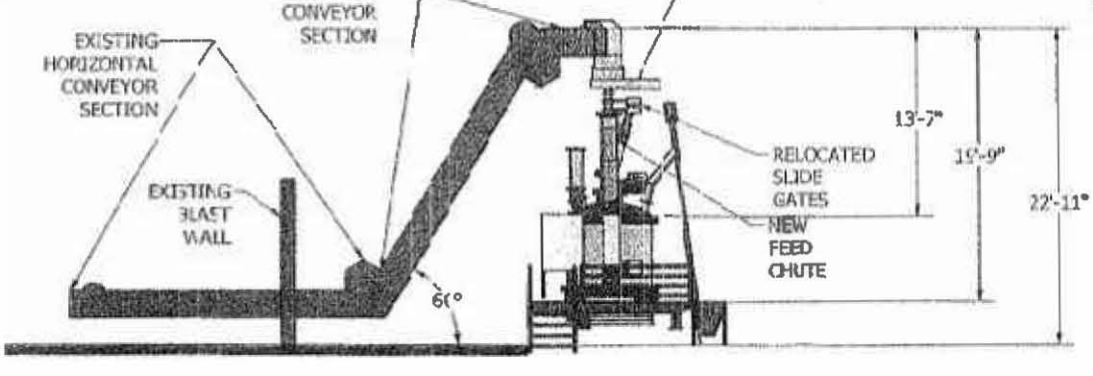
EXISTING HORIZONTAL CONVEYOR SECTION
NEW CONVEYOR SECTION
RELOCATED WEIGHT CELL
EXISTING BLAST WALL
60°
RELOCATED SLIDE GATES
NEW FEED CHUTE
13'-7"
15'-9"
22'-11"

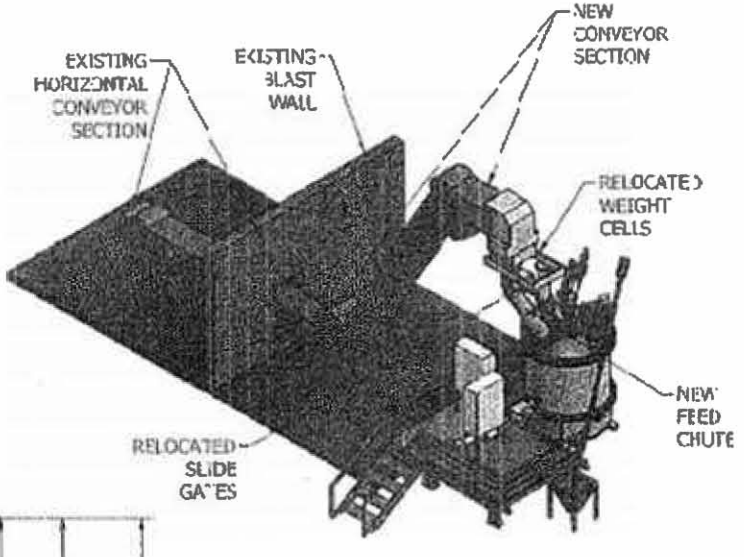
EXISTING HORIZONTAL CONVEYOR SECTION
EXISTING BLAST WALL
NEW CONVEYOR SECTION
RELOCATED WEIGHT CELLS
NEW FEED CHUTE
RELOCATED SLIDE GATES

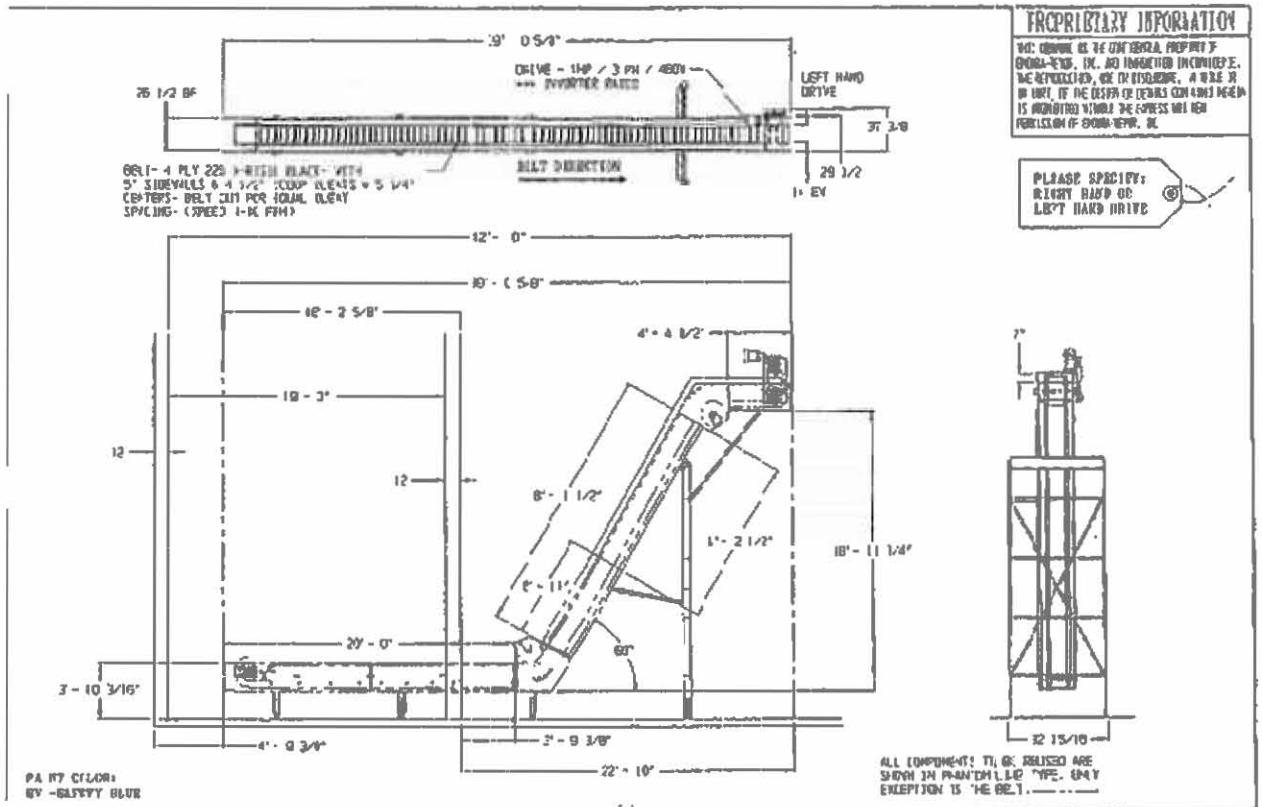

PROPRIETARY INFORMATION

THE CONTENTS OF THE CONTENTS, PROPERTY OF ENGINEERED, INC. AND PROTECTED UNDER COPYRIGHT. THE REPRODUCTION, USE OR DISCLOSURE, IN WHOLE OR IN PART, OF THE DESIGN OR DETAILS CONTAINED HEREIN IS PROHIBITED WITHOUT THE EXPRESS WRITTEN PERMISSION OF ENGINEERED, INC.

PLEASE SPECIFY:
RIGHT HAND OR
LEFT HAND DRIVE

SAFETY REVIEW

THE NEED FOR SAFETY DEVICES VARIES WITH EACH APPLICATION OF THIS PRODUCT. THIS DRAWING MAY NOT INCLUDE ALL APPROPRIATE SAFETY DEVICES FOR YOUR APPLICATION. AS SAFETY INFORMATION, PLEASE ADVISE YOUR CHOICE OF DEVICES THAT ARE APPROPRIATE FOR YOUR APPLICATION, BASED ON YOUR SAFETY ASSESSMENT. DEVICES MAY INCLUDE, BUT ARE NOT LIMITED TO THOSE SUCH AS, ADDITIONAL GUARDING, SAFETY CONTROLS, BARRIERS, ERECTION, ETC. COMPLIANCE WITH FEDERAL, STATE, AND INDUSTRY CODES ARE THE RESPONSIBILITY OF YOUR FIRM, AS THE USERS OWNER/OPERATOR, AND NOT ENGINEERED, INC.

APPLICATION REVIEW

PLEASE REVIEW THE COMPONENTS SELECTED FOR THIS DESIGN TO FUNCTION PROPERLY IN YOUR INTENDED APPLICATION. YOUR INTEGRATION AND APPLICATION REVIEW IS AN IMPORTANT RESPONSIBILITY OF ENGINEERED. THEREFORE, ENGINEERED, INC. MAKES NO CLAIMS AS TO THE PERFORMANCE OF THIS DESIGN FOR ANY PARTICULAR PURPOSE OR APPLICATION.

APPROVED AS SHOWN	OR CHANGES REQUIRED
CO. NAME	NSE
SIGNATURE	
DATE	08/14/2011

ENGINEERED SYSTEMS INC.

JOB NO:	[illegible]
DRAWN BY:	[illegible]
DATE	08/13/11
REVISION:	-
SCALE:	1:8
REF DWG:	[illegible]

SUBJ: MODIFICATION TO CONVEYOR ON JOB 146926

DWG NO: "8017 APPROVAL

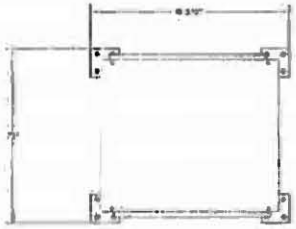

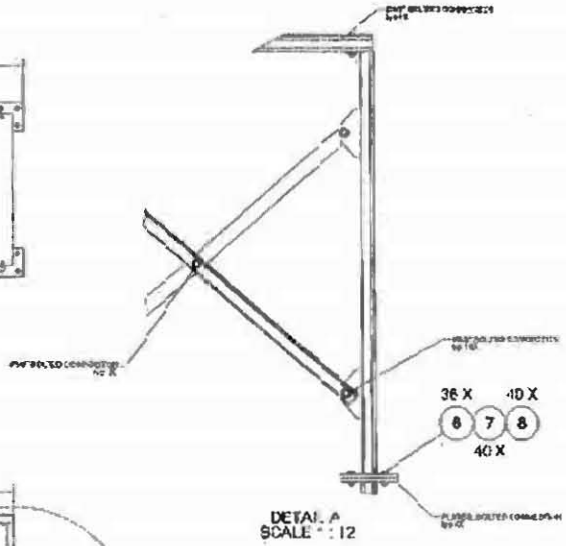
36 X
40 X
8
7
8
40 X
DETAIL A
SCALE 1 : 12

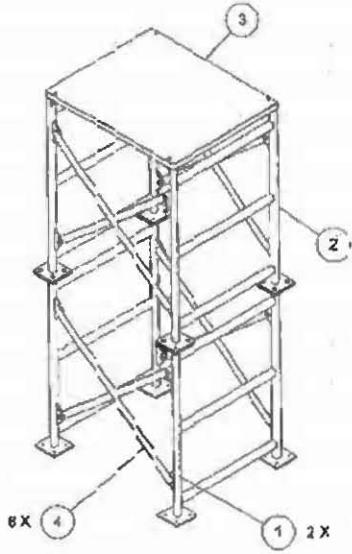
3
2
2 X
6 X
4
1
2 X

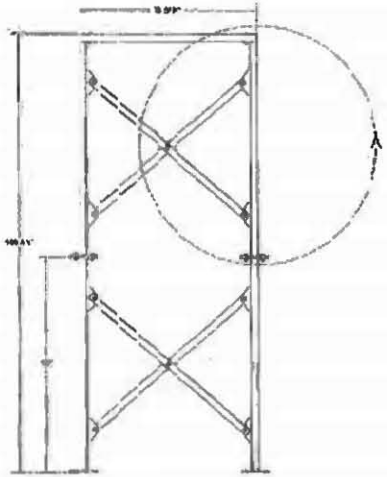

JEFFREY W. RUSENER
REGISTERED
STATE OF
INDIANA
PROFESSIONAL ENGINEER

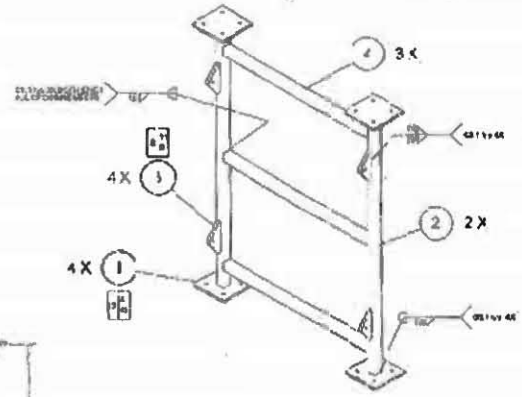
3 X
4 X
2 X
4 X

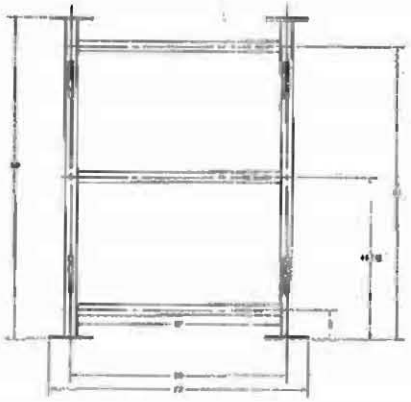

JEFFREY W. RUFFNER
REGISTERED
STATE OF
INDIANA
PROFESSIONAL ENGINEER

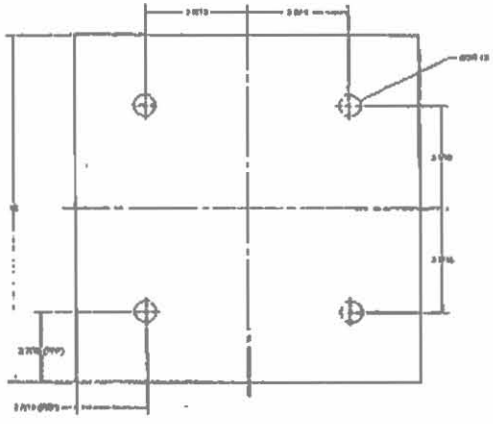

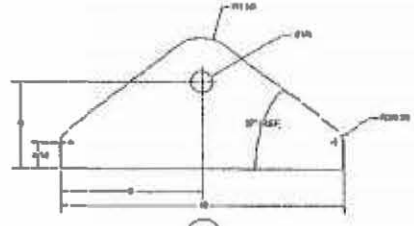

3

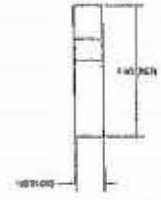

1

NOTES:
1. REMOVE ALL BURS AND SHARP EDGES

JEFFREY W. RUFFNER
REGISTERED
NO. 0810448
STATE OF
INDIANA
PROFESSIONAL ENGINEER

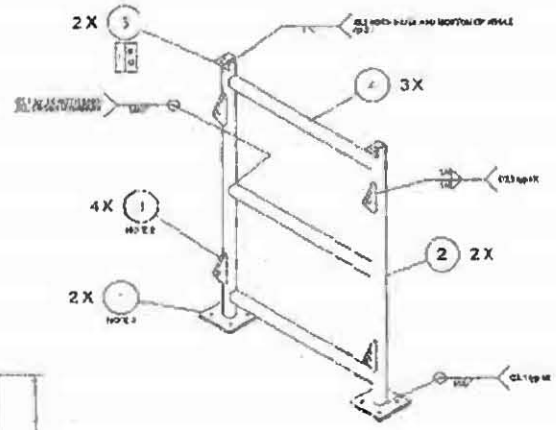
2X
3X
4X
2X
2X

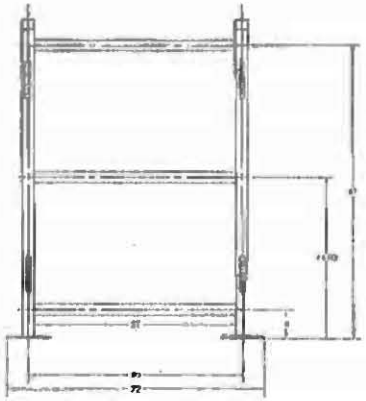

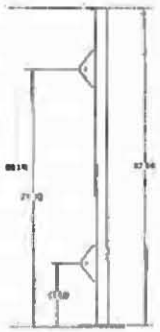

JEFFREY W. RUFFNER
REGISTERED
19CP10448
STATE OF
INDIANA
PROFESSIONAL ENGINEER

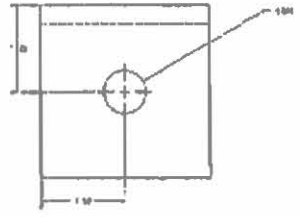

6

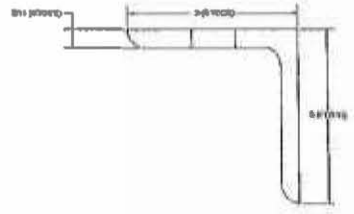

NOTES
1. [illegible]

REVISIONS		
	DESCRIPTION	

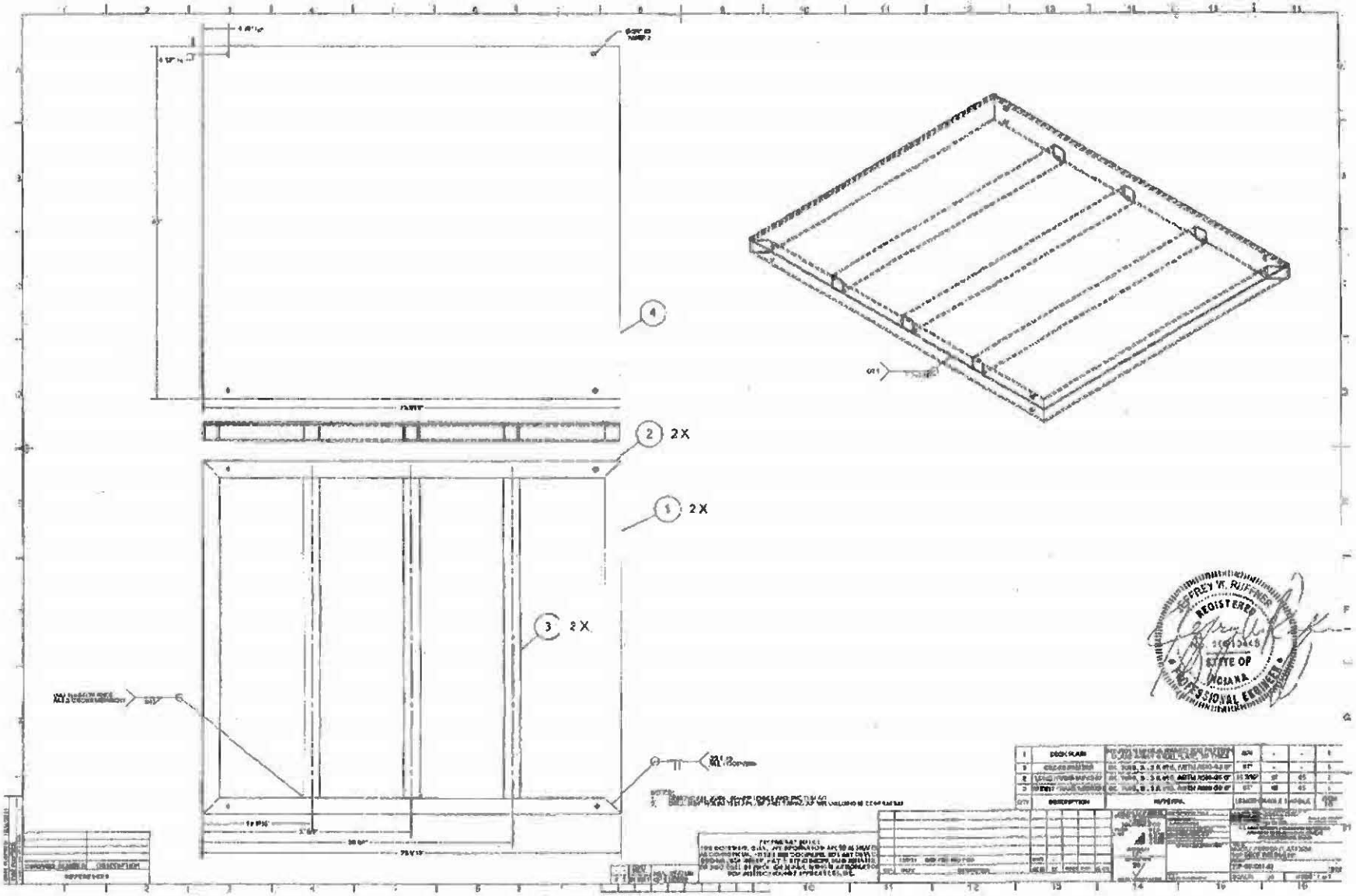
2 X
1 2 X
3 2 X
4
6
JEFFREY W. RUFFNER
REGISTERED
STATE OF
INDIANA
PROFESSIONAL ENGINEER

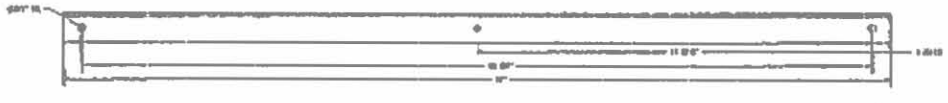

GEOFREY W. RUFFINER
REGISTERED
STATE OF
INDIANA
PROFESSIONAL ENGINEER

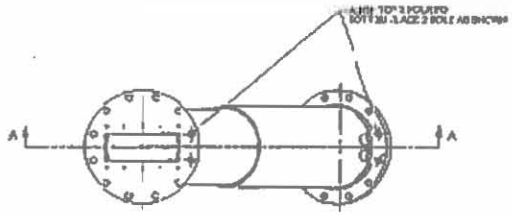

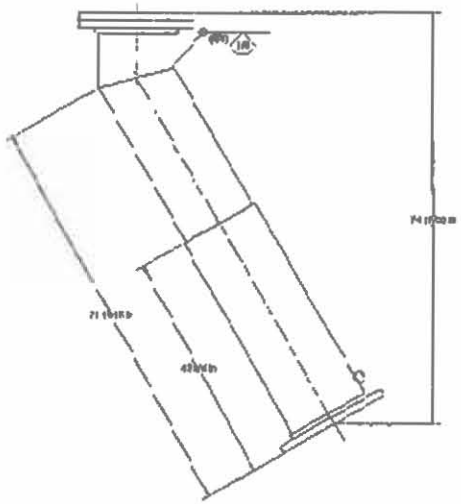

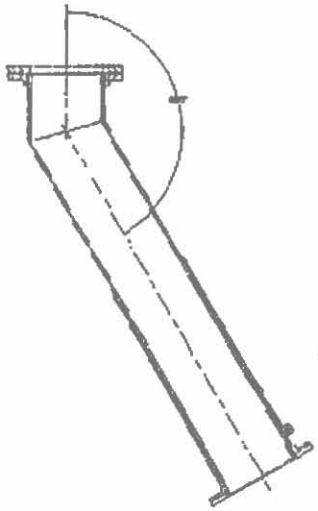

SECTION A-A
SCALE 0.10 : 1

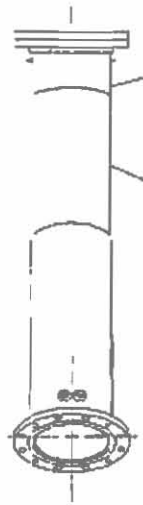

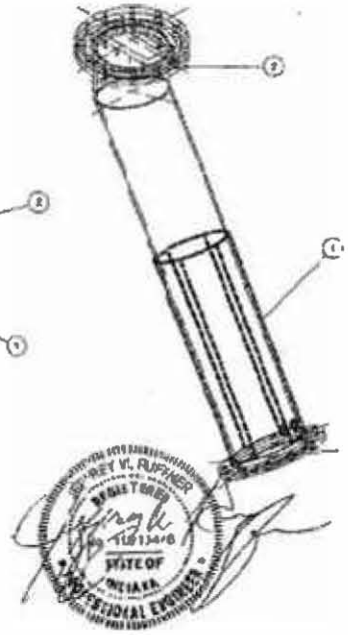

23AS-10ME-1-17

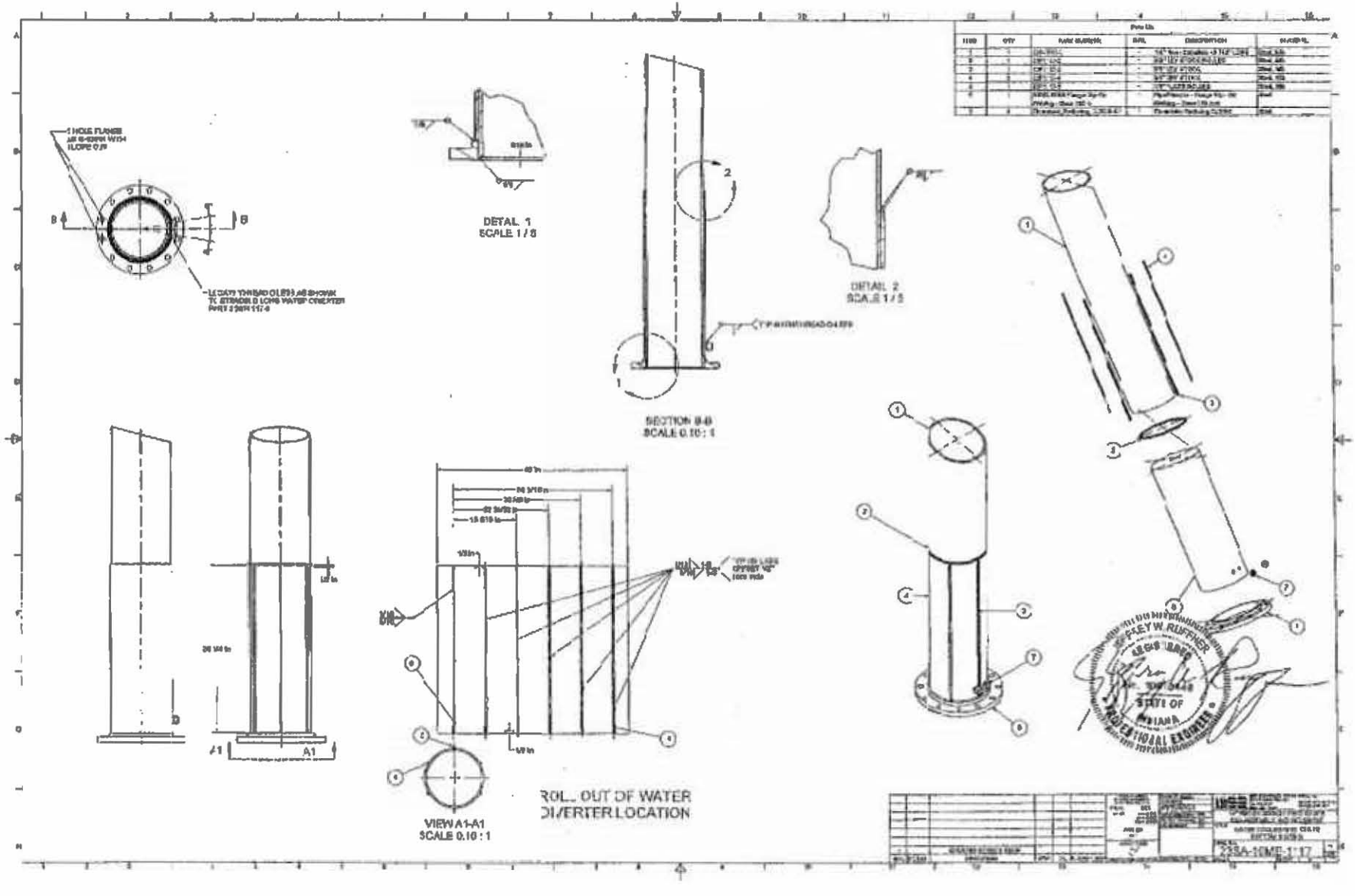
DETAIL 1
SCALE 1 / 5
DETAIL 2
SCALE 1 / 5
SECTION B-B
SCALE 0.10 : 1
VIEW A1-A1
SCALE 0.10 : 1
ROLL OUT OF WATER
DIVERTER LOCATION
STATE OF
INDIANA
PROFESSIONAL ENGINEER

23P1117-4
3/8" KEY STOCK

23P1117-3
3/8" KEY STOCK

23P1117-5
1/8" PLATE ROLLED

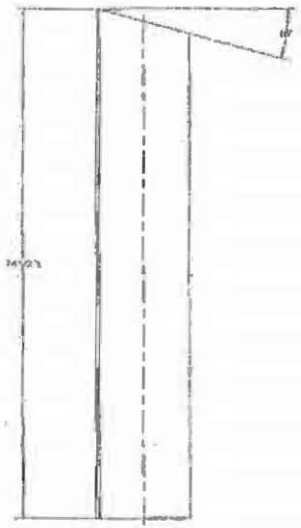

23P-111
14" Pipe - Schedule 40 74.5" LONG

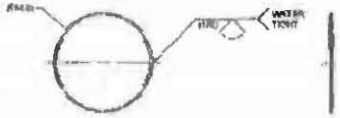

23P1117-2
3/8" KEY STOCK ROLLED

23AS-10ME-11

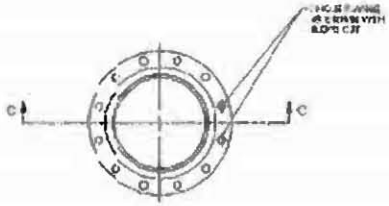

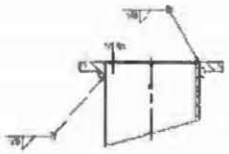

SECTION C-C
SCALE 1 / 8

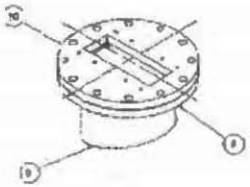

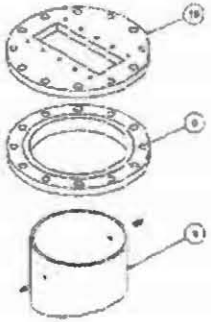

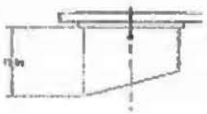

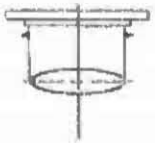

23SA-10ME-11.7

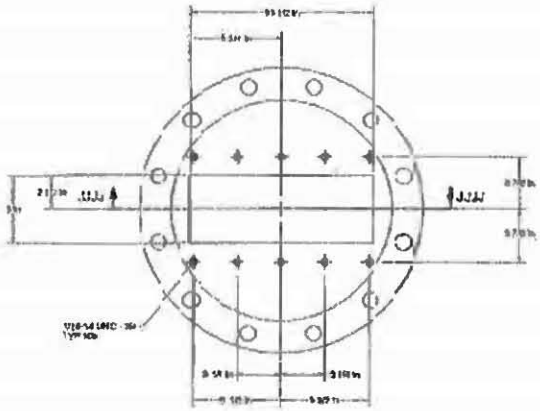

SECTION JJJ-JJJ
SCALE : 1/4

23P1117-7
14" - Flange Blind - Class 150,Incl.

23P1117-6
14" Pipe - Schedule 40 - 12 LONG

23AS-1064E-1-17

Figure D-4

Process Flow Diagram – APE Incinerator

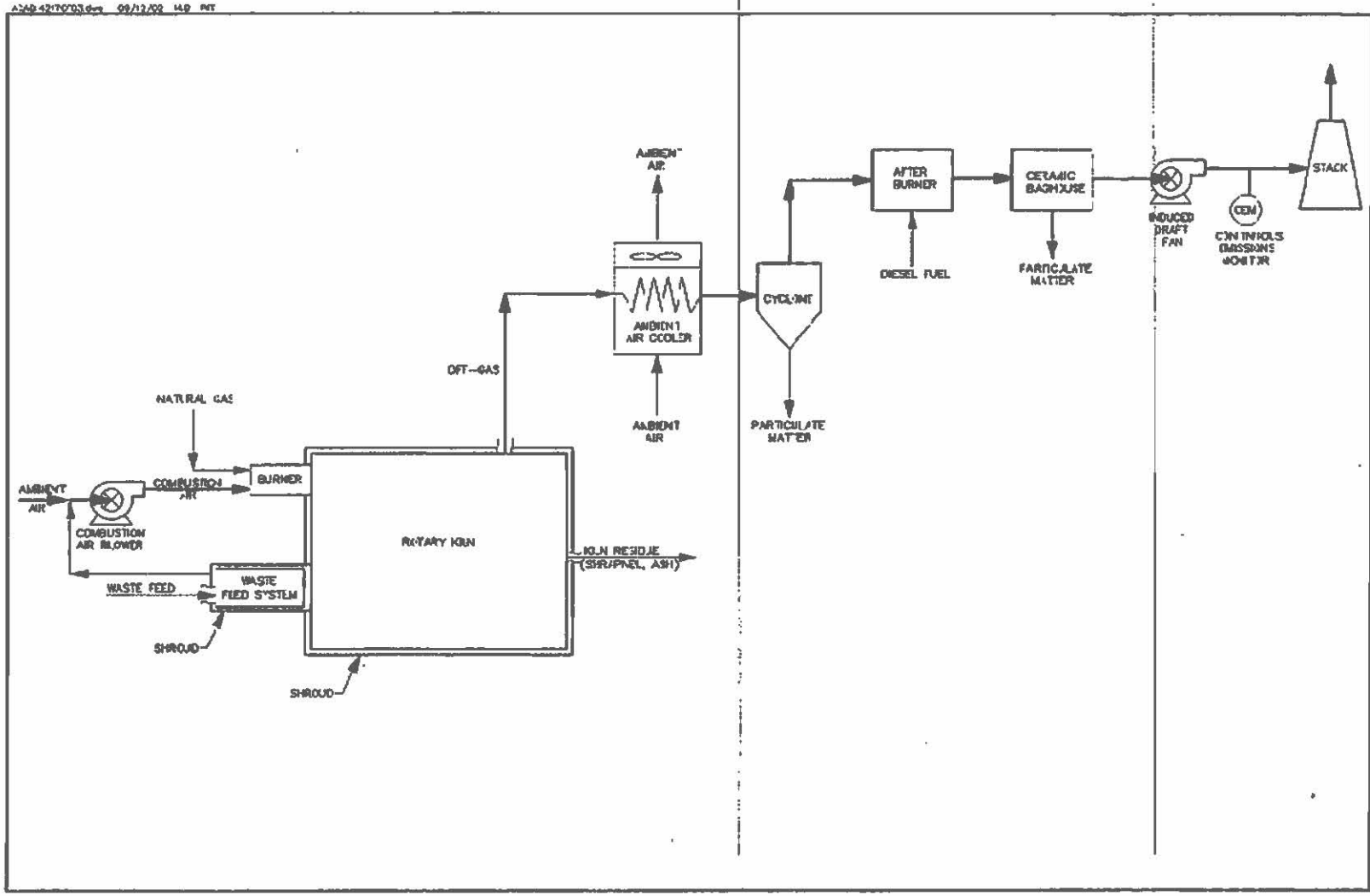
AMBIENT AIR
COMBUSTION AIR BLOWER
NATURAL GAS
COMBUSTION AIR
BURNER
WASTE FEED
WASTE FEED SYSTEM
SHROUD
SHROUD
ROTARY KILN
KILN RESIDUE (SLAG/PNEL, ASH)
OFF-GAS
AMBIENT AIR COOLER
AMBIENT AIR
AMBIENT AIR
CYCLONE
PARTICULATE MATTER
AFTER BURNER
DIESEL FUEL
CERAMIC BAGHOUSE
PARTICULATE MATTER
INDUCED DRAFT FAN
CEM
CONTINUOUS EMISSIONS MONITOR
STACK
Tetra Tech NUS, Inc.
AMMUNITION PECULIAR EQUIPMENT (APE)
PROCESS FLOW DIAGRAM
CONTRACT NO. 4217
DRAWN BY HJD 4/25/02
CHECKED BY VP 4/25/02
SCALE NOT TO SCALE

Figure D-5

Incinerator Feed Handling System – APE Incinerator

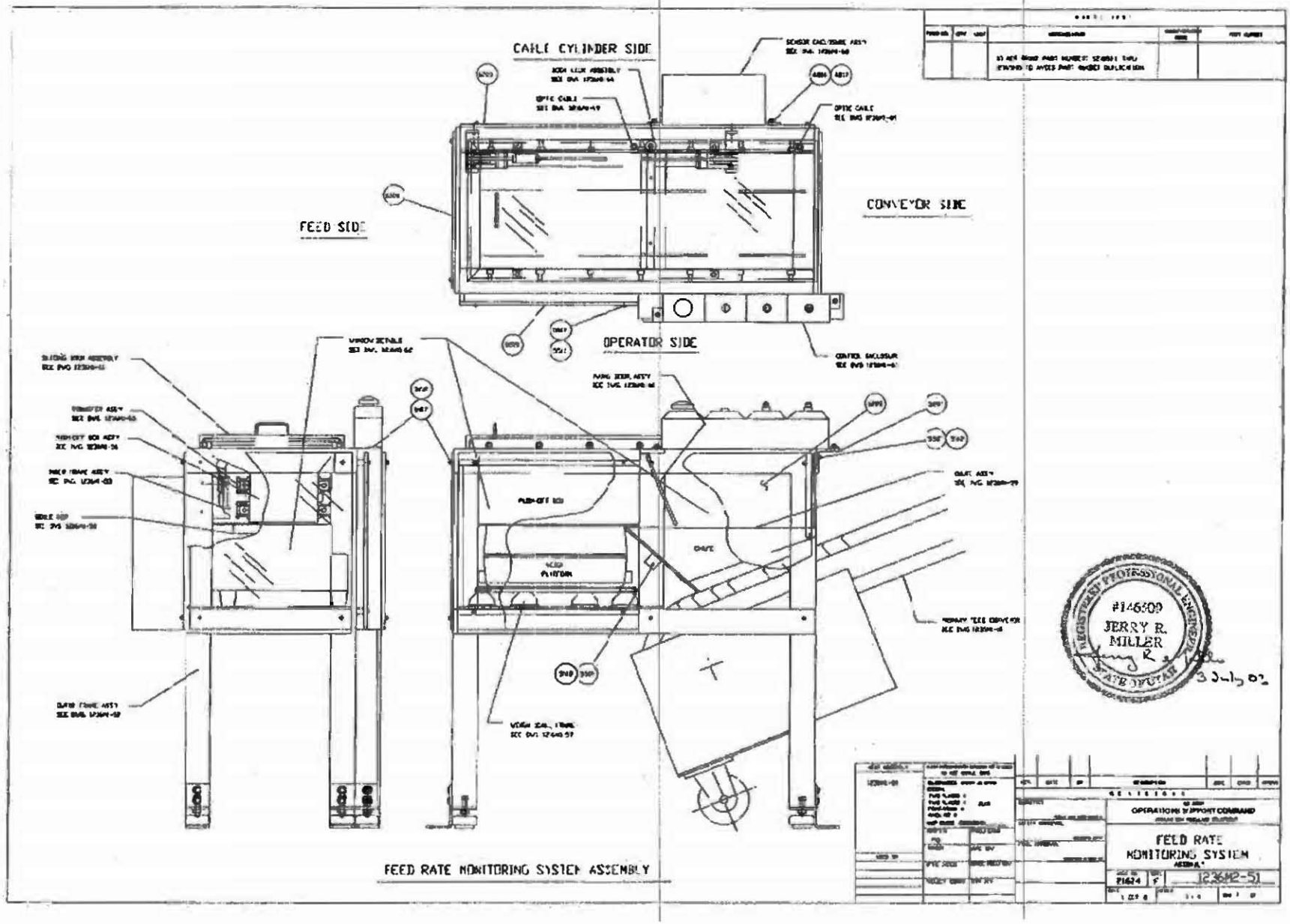
CABLE CYLINDER SIDE
FEED SIDE
CONVEYOR SIDE
OPERATOR SIDE
FEED RATE MONITORING SYSTEM ASSEMBLY
#146509
JERRY R. MILLER
STATE OF UTAH
OPERATIONS SUPPORT COMMAND
FEED RATE MONITORING SYSTEM
12364-51

Figure D-6

Process Flow Diagram – CDC

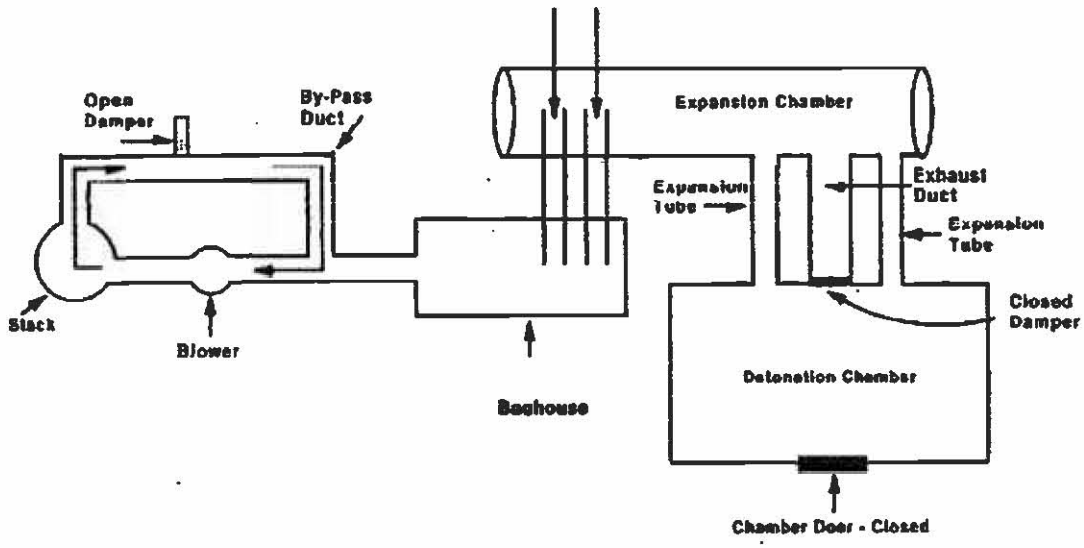

A. Off-Gas Flow At Time of Detonation

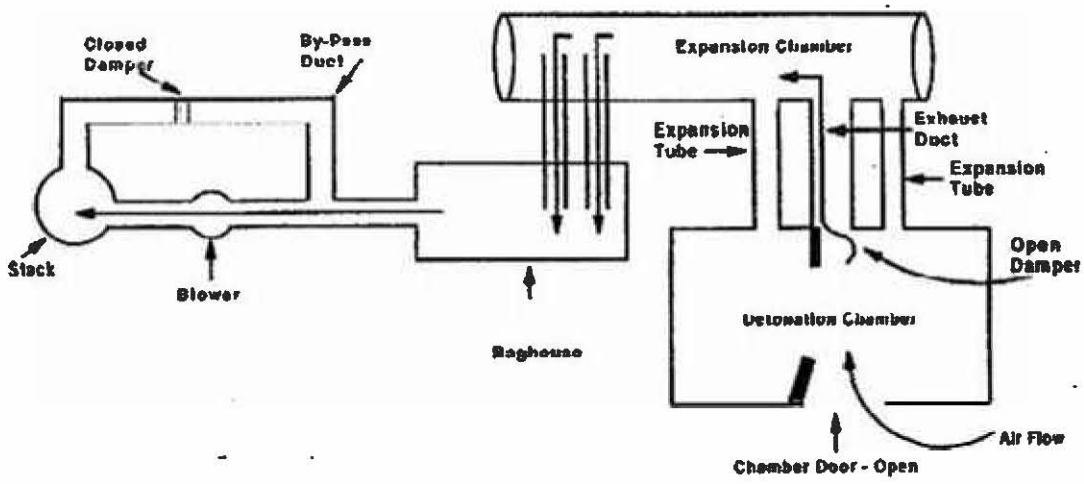

B. Off-Gas Flow During Purge Cycle

Contained Detonation Chamber Off-Gas Flow Diagram and Equipment Schematic

[Based upon Figure 2-1 D-100 CDC Air Flow System from the *Emissions Test Report for the D-100 Contained Detonation Chamber System at Blue Grass Army Depot*, Richmond, Kentucky, October 2001]

Figure D-7

Pollution Control System Drawings – MPTS

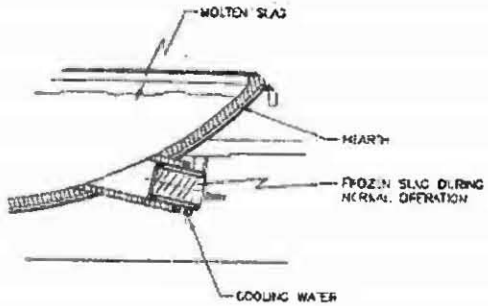

DETAIL D

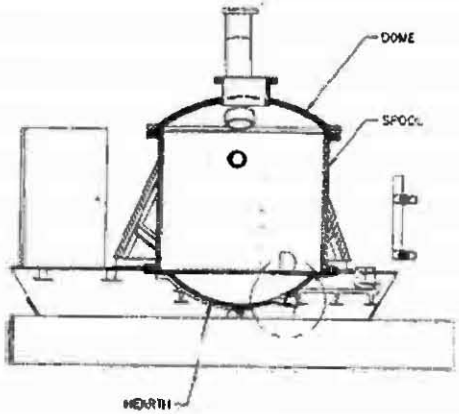

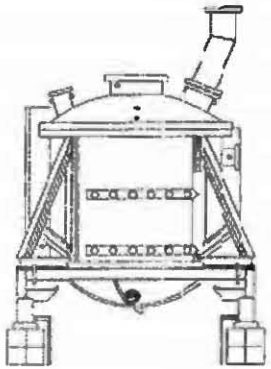

DRAWING NUMBER	DESCRIPTION
77-88A-7000	[illegible]
77-88A-7001	[illegible]
77-88A-7002	[illegible]

REFERENCES

REV	RELEASE	DESCRIPTION	DRWN	CK	REVISION	[illegible]
A	6/5/03	[illegible]	[illegible]	[illegible]	[illegible]	[illegible]
-	5/1/03	[illegible]	[illegible]	-	-	-
B1	1/1/03	[illegible]	[illegible]	-	-	-

REVISIONS

APPROVALS

[illegible]

[illegible]

[illegible]

[illegible]

[illegible]

TITLE [illegible]

DWG NO 77A-88A-7000

SHEET 1 OF 3

Figure D-8

Construction Drawings and Pictures – CDC

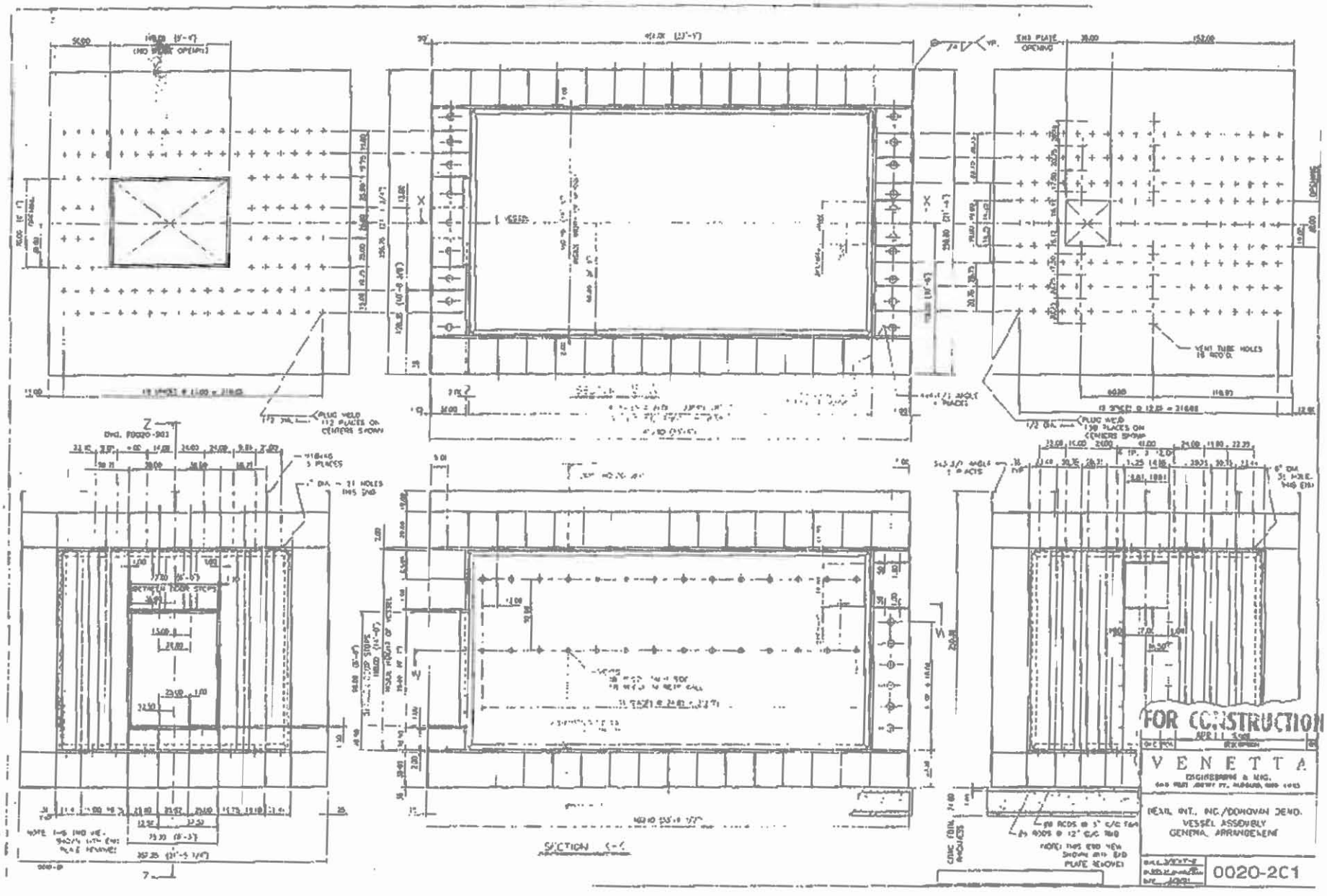
FOR CONSTRUCTION
APR 11 2008
VENETTA
ENGINEERING & MFG.
DENTAL INT., INC./DONOVAN DEND.
VESSEL ASSEMBLY
GENERAL ARRANGEMENT
0020-2C1
SECTION
PLUG WELD
VENT TUBE HOLES
NOTE: THIS END VIEW SHOWN WITH END PLATE REMOVED

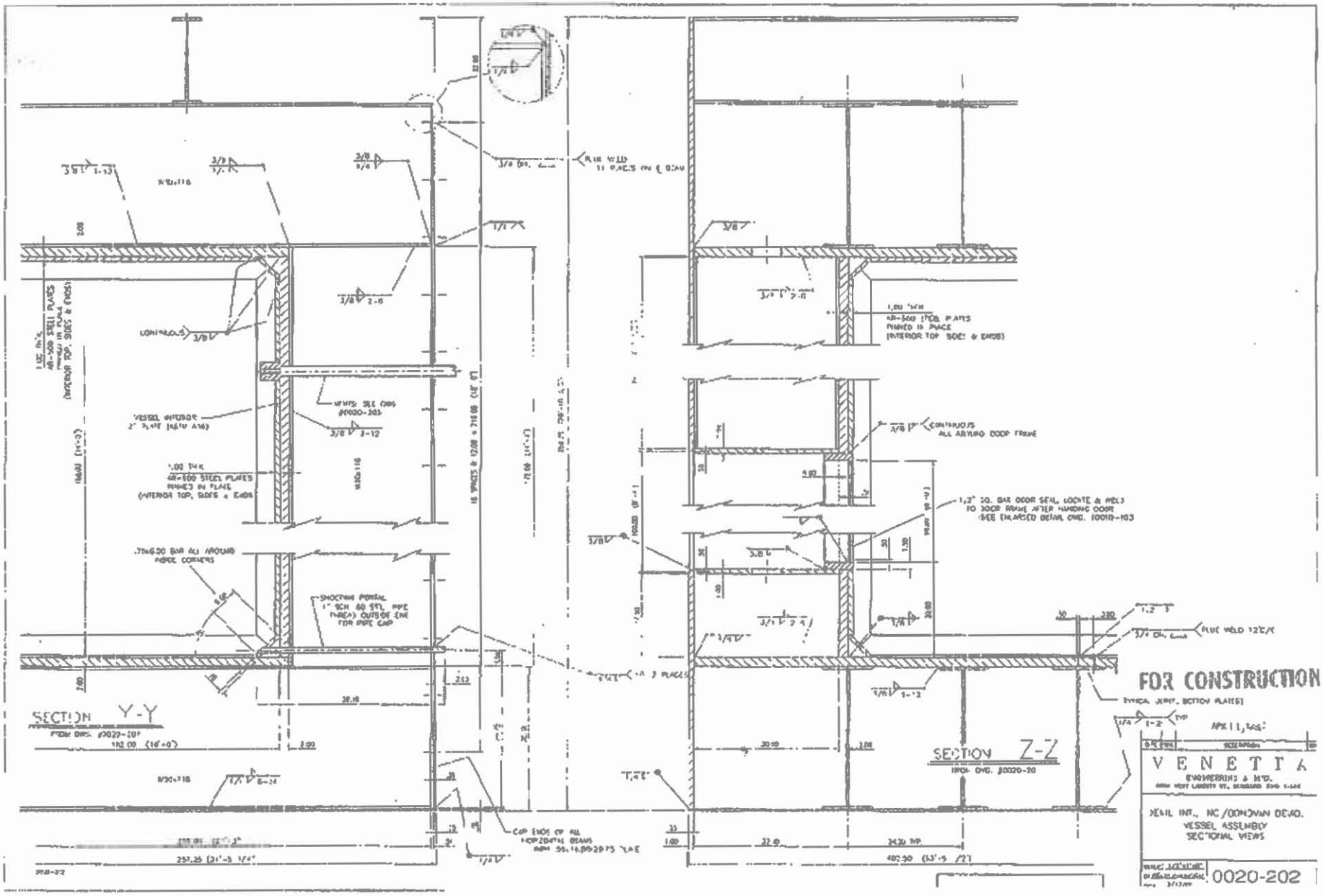
SECTION Y-Y
SECTION Z-Z
FOR CONSTRUCTION
VENETIA
ENGINEERING & MFG.
XENIL INT., NC/DONOVAN DEVO.
VESSEL ASSEMBLY
SECTIONAL VIEWS
0020-202

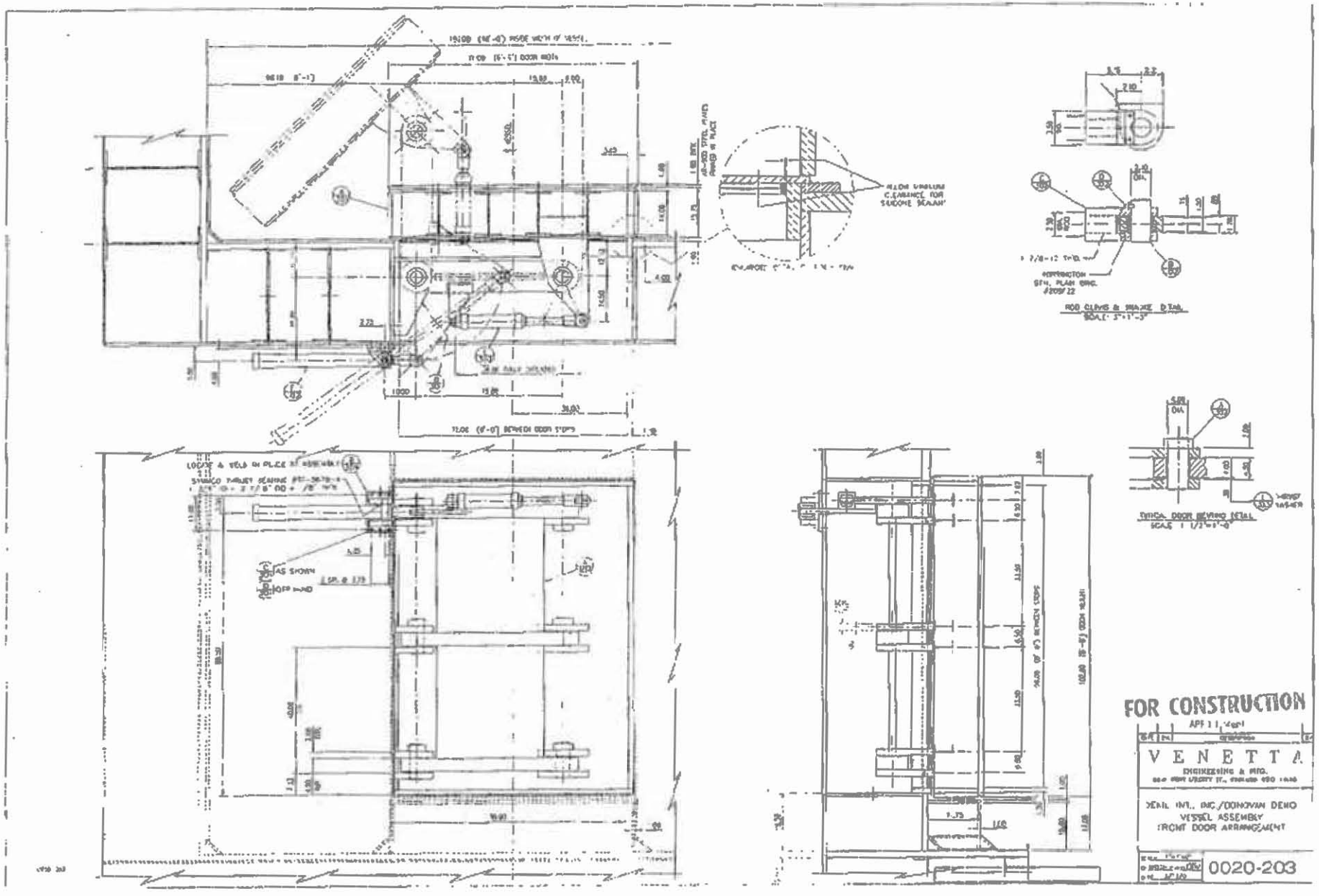
FOR CONSTRUCTION
VENETTA
ENGINEERING & MFG.
0020-203

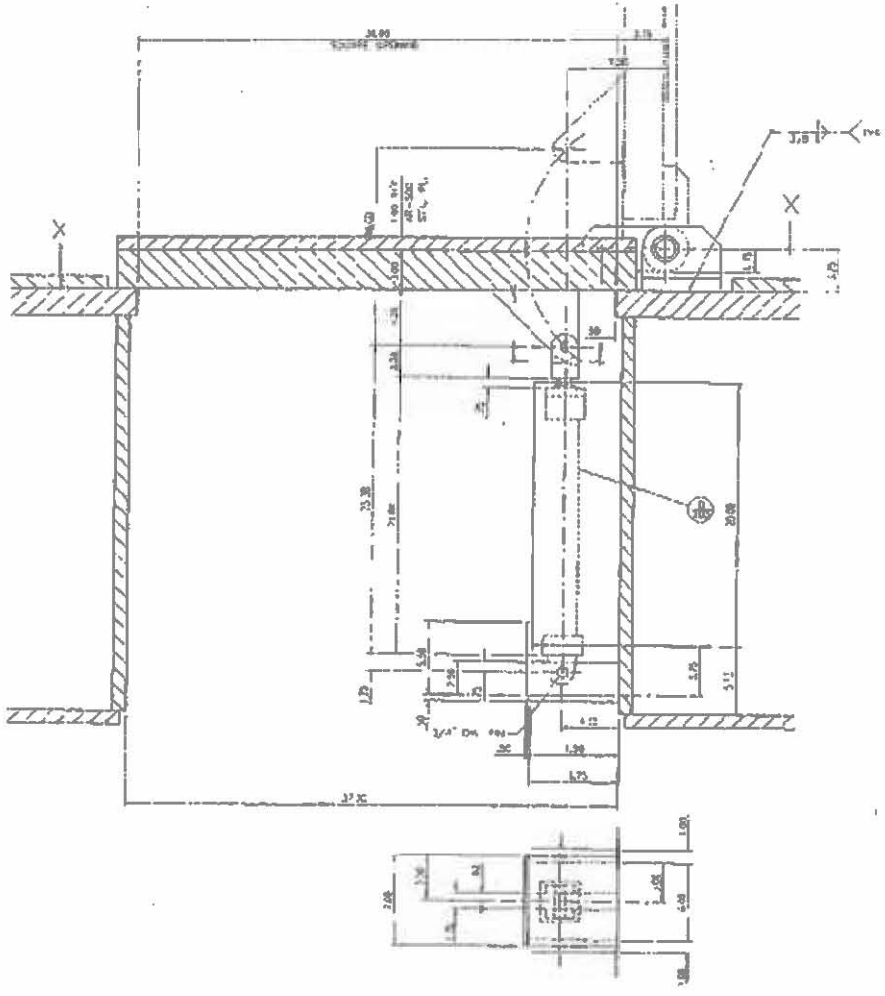

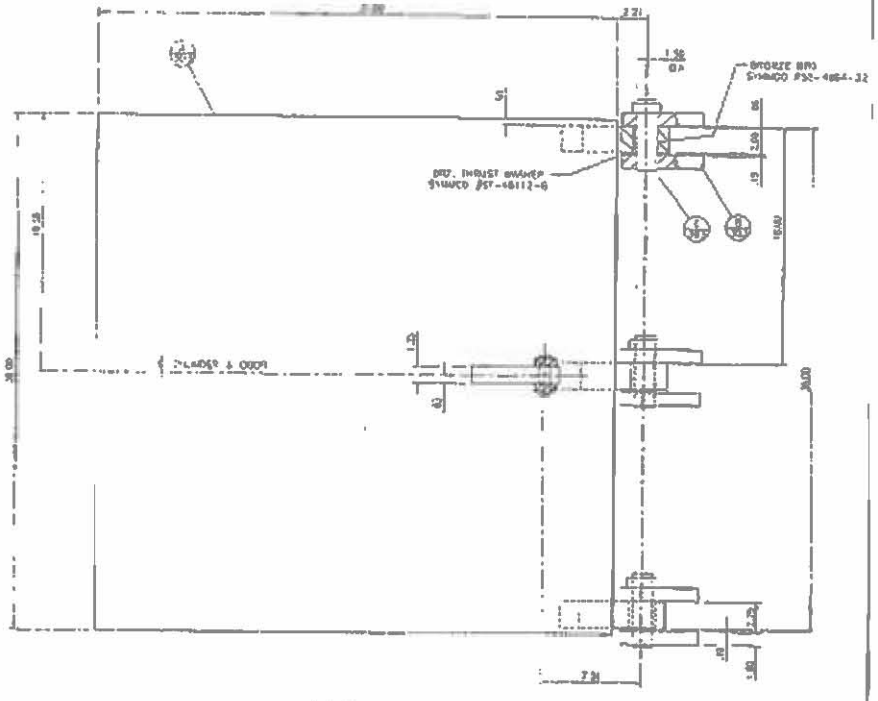

SECTION X-X

FOR CONSTRUCTION

DATE	BY	DESCRIPTION

VENETTA
ENGINEERING & MFG.

CEMI, INT., INC./DONOVAN DEMO.
VESSEL ASSEMBLY
FEED DOOR ARRANGEMENT

0020-204

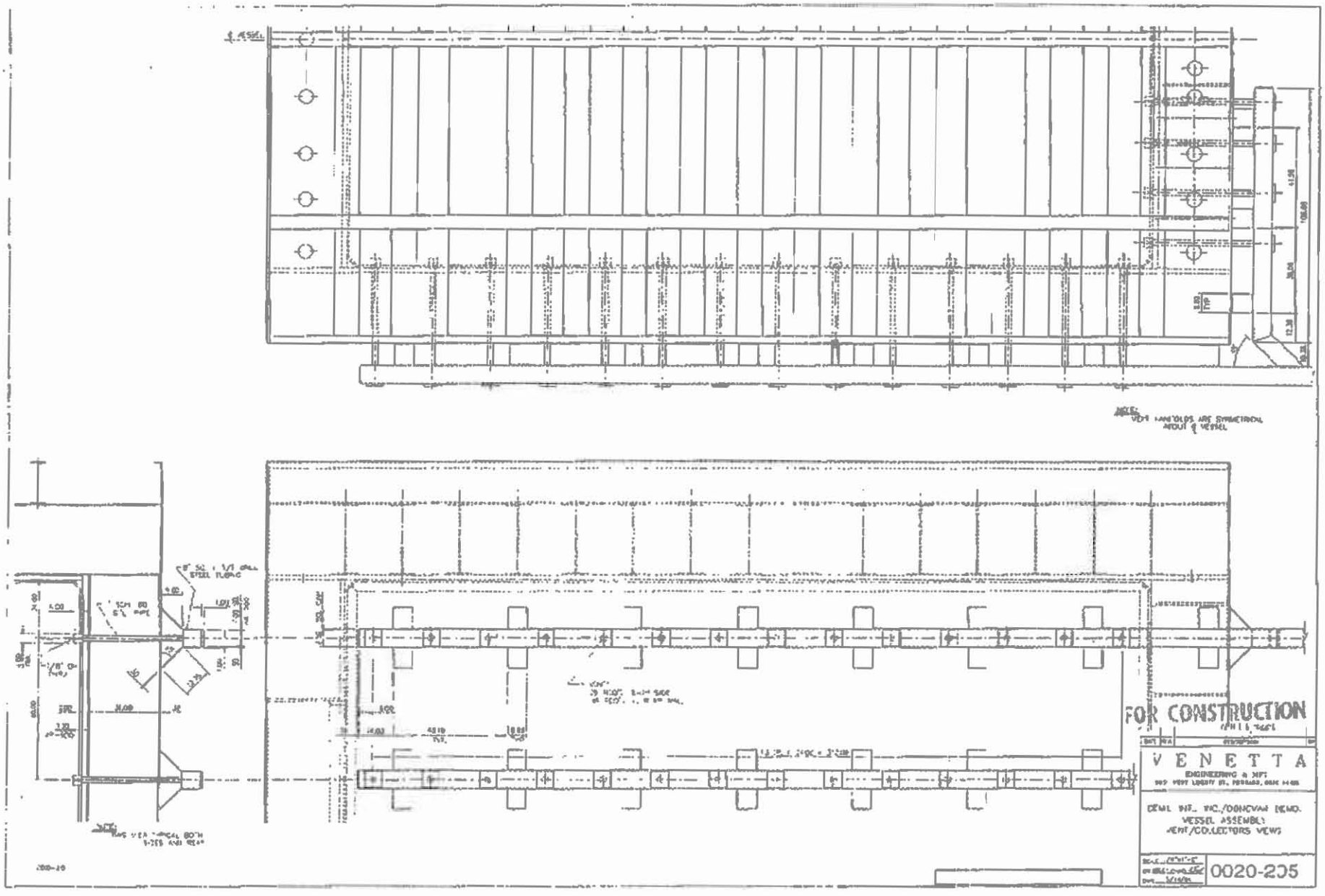
FOR CONSTRUCTION
VENETTA
ENGINEERING & MFG
VESSEL ASSEMBLY
VENT/COLLECTORS VIEWS
0020-205

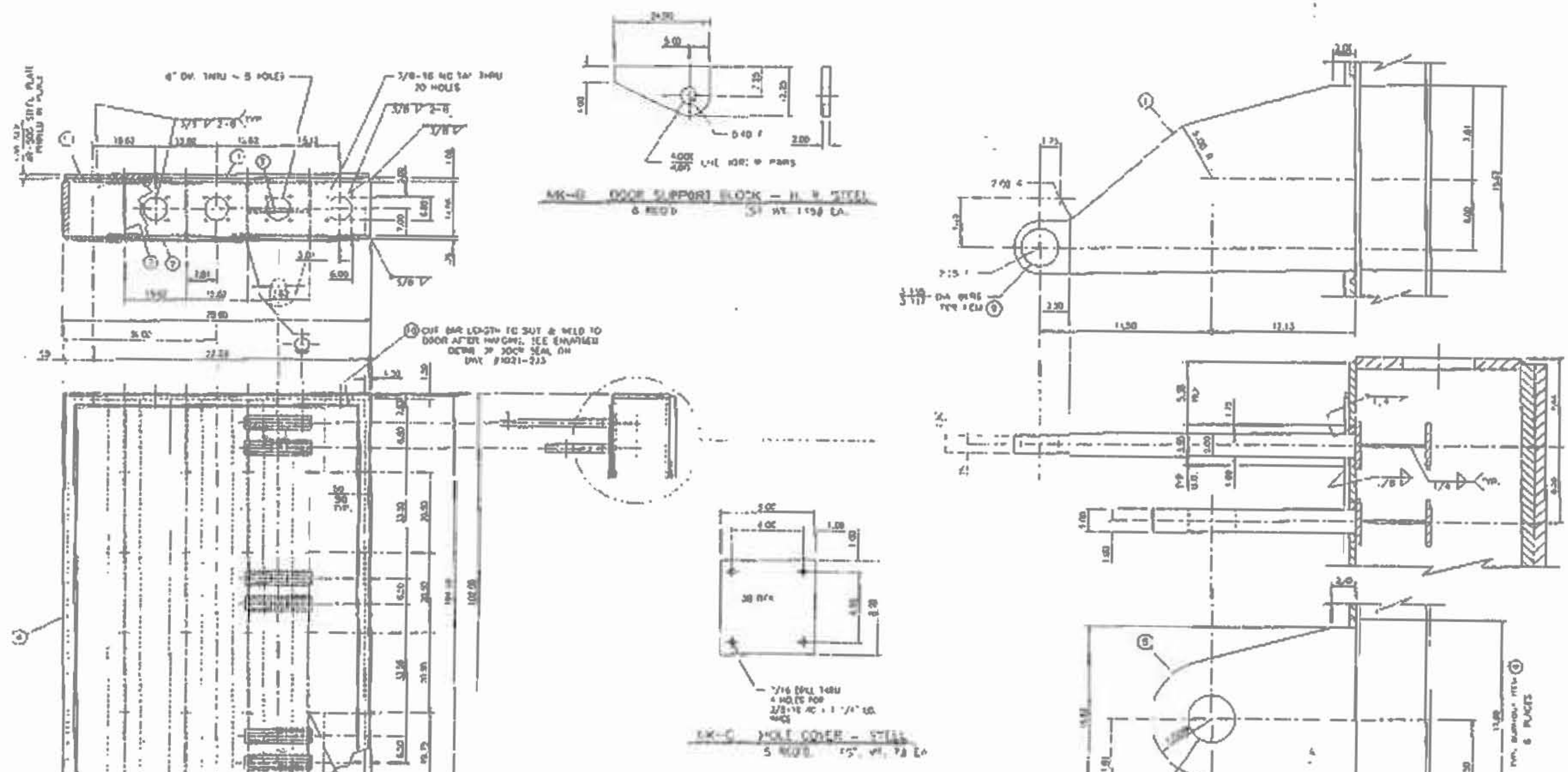

			DESCRIPTION		
A		1	FRONT DOOR	[illegible]	[illegible]
[illegible]		[illegible]	[illegible]	[illegible]	[illegible]
[illegible]		1	[illegible]	[illegible]	[illegible]
[illegible]		[illegible]	[illegible]	[illegible]	
[illegible]		[illegible]	[illegible]	[illegible]	
[illegible]		[illegible]	[illegible]	[illegible]	
[illegible]		[illegible]	[illegible]	[illegible]	
[illegible]		1	[illegible]	[illegible]	
	[illegible]	1	[illegible]	[illegible]	
	[illegible]		[illegible]		
			[illegible]		
	[illegible]		[illegible]	[illegible]	[illegible]
	[illegible]		1" THK. [illegible] STEEL PLATE	[illegible]	
			COVER AREA [illegible]		
B		1	DOOR SUPPORT BLOCK		
	1		[illegible] x 2 1/4" x 1'-[illegible]	[illegible]	[illegible]
C		5	HOLE COVER		
	1		[illegible] x 5" x 8"	[illegible]	[illegible]

FOR CONSTRUCTION

V E N E T T A
ENGINEERING & MFG.

DEAL INT., INC./DONOVAN DEMO
VESSEL ASSEMBLY
FRONT DOOR DETAILS

002C-301

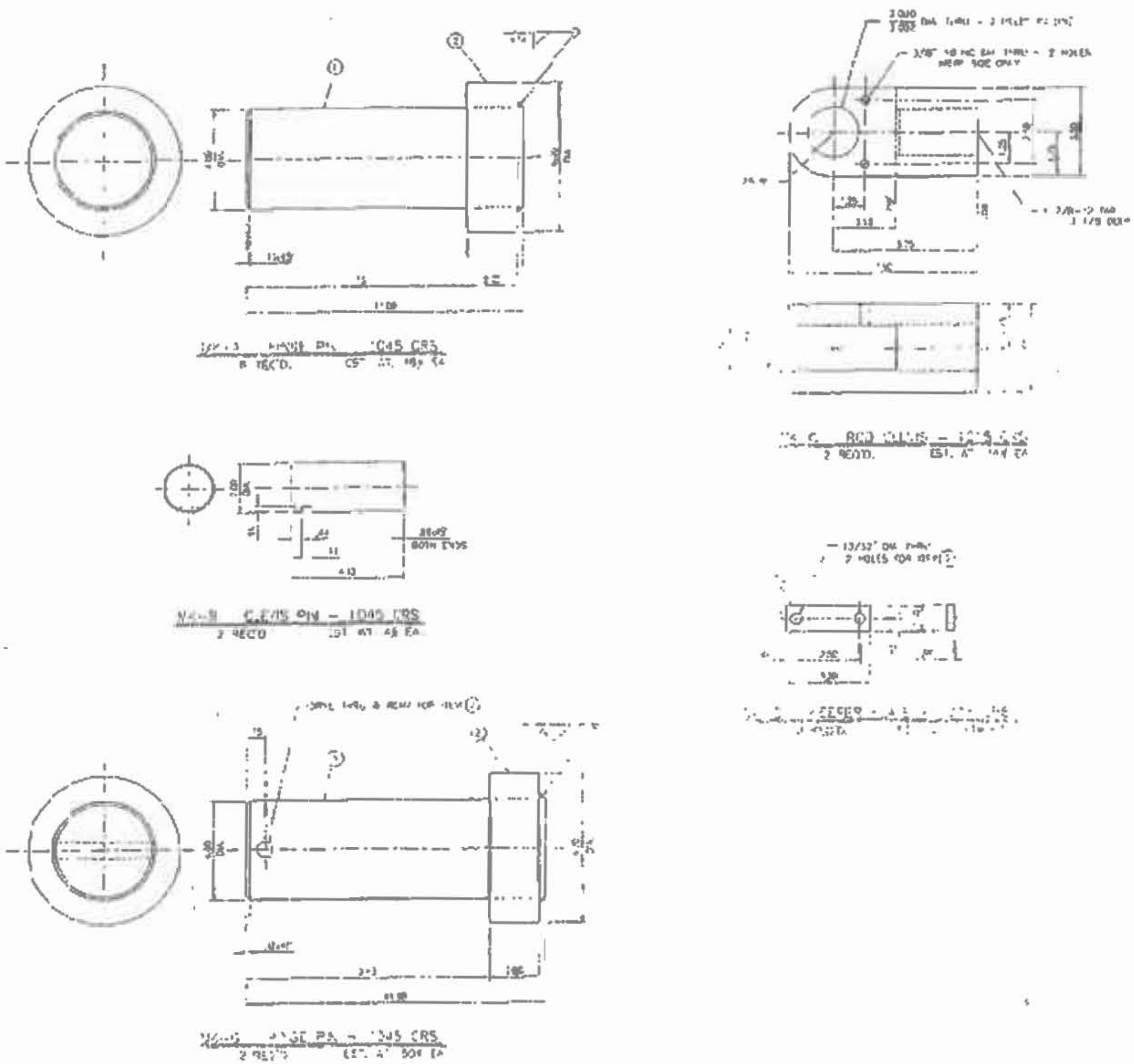

PART	ITEM	REQ'D	DESCRIPTION	WT	DWG
A		4	HINGE PIN	12	[illegible]
	1	1	[illegible]	[illegible]	[illegible]
	2	1	[illegible]	[illegible]	[illegible]
B		2	CLEVIS PIN		
	1	2	[illegible]	4	[illegible]
C		2	ROD CLEVIS		
	1	2	[illegible]	14	[illegible]
D		2	[illegible]		
	1	2	[illegible]	[illegible]	[illegible]
	2	2	[illegible]		[illegible]
E		1	[illegible] CYLINDER		
			[illegible]		
F		1	[illegible] CYLINDER		
			[illegible]		
G		2	HINGE [illegible]	[illegible]	[illegible]
	1	1	[illegible]	[illegible]	[illegible]
	2	1	[illegible]	[illegible]	[illegible]
	3	1	[illegible]		[illegible]

APRIL 11, [illegible]

FOR CONSTRUCTION

VENETTA
ENGINEERING & MFG.

D.M. INT. INC./DONOVAN DEMO
VESSEL ASSEMBLY
FRONT DOOR DETAILS

0020-302

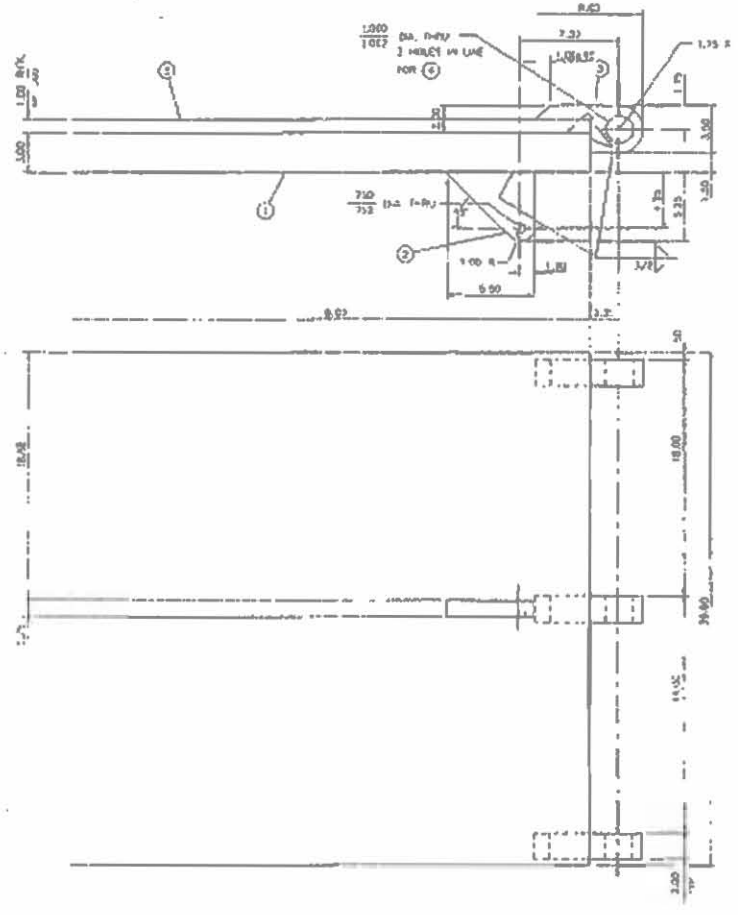

MK-2 REAR DOOR - WELDED STEEL
1 REQ'D EST. WT. [illegible]

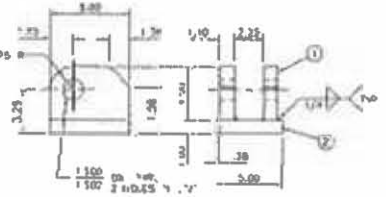

MK-3 DOOR SUPPORT - WELDED BARS
3 REQ'D "B" WT 228 EA.

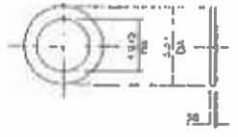

MK-4 THRUST WASHER - BRONZE
8 REQ'D

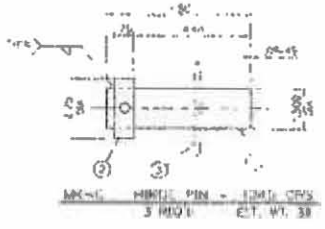

MK-5 HINGE PIN - [illegible] CRS
3 REQ'D EST. WT. 38

A		1	[illegible]	[illegible]	[illegible]
	1	1	[illegible]	[illegible]	[illegible]
	2	1	[illegible]	[illegible]	[illegible]
	3	2	[illegible]	[illegible]	[illegible]
	4	2	[illegible]	[illegible]	[illegible]
			[illegible]		
	5		[illegible]	[illegible]	
			[illegible]		
B		2	[illegible]	[illegible]	[illegible]
		2	[illegible]	[illegible]	[illegible]
	7	1	[illegible]	[illegible]	[illegible]
C		2	[illegible]		
		1	[illegible]	[illegible]	[illegible]
		1	[illegible]		[illegible]
			[illegible]		
	8	1	[illegible]		[illegible]
D		1	[illegible]		
			[illegible]		
			[illegible]		
			[illegible]		
			[illegible]		
			[illegible]		
			[illegible]		
			[illegible]		
E		6	[illegible]		[illegible]
		3	[illegible]		
			[illegible]		
			[illegible]		
			[illegible]		

FOR CONSTRUCTION

VENETTA
ENGINEERING & INC
[illegible]

CENL DIT, INC/DONOVAN DEMO.
VESSEL ASSEMBLY
REAR DOOR DETAILS

0020-303

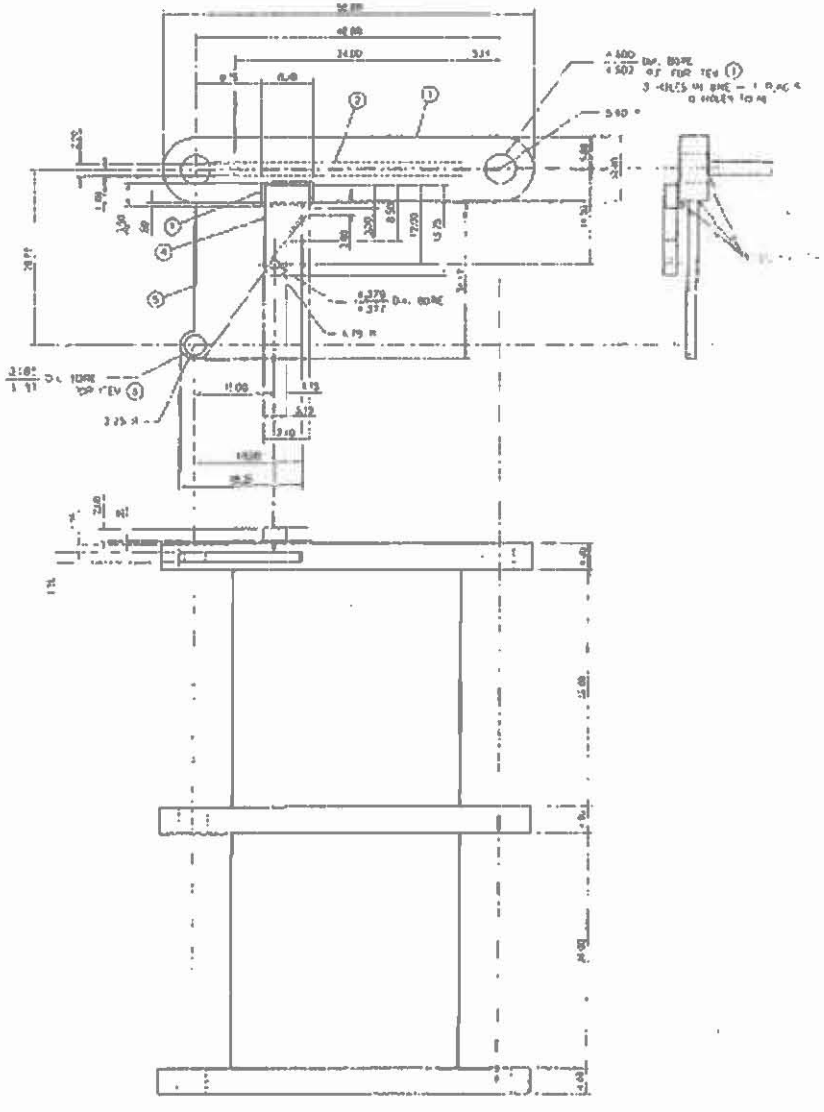

FRONT DOOR HINGE - WELDED STEEL
REQD. EST. WT. 330#

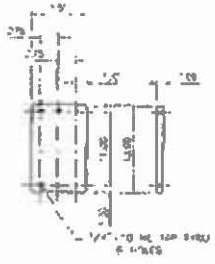

LOCKING PAD - STEEL
REQD. EST. WT. 30#

MARK	ITEM	REQ'D	DESCRIPTION	WT.	UNIT
A		1	FRONT DOOR HINGE	330	W.S.
	2	2	[illegible]	[illegible]	[illegible]
	3	2	[illegible]	[illegible]	-
	3	2	[illegible]		BRZ
			[illegible]		
	1	1	[illegible]	30	A36
	1	1	[illegible]	40	-
	8	1	TORSION SPRING PAIR		
			ROLL BEARING [illegible]		
	7	2	[illegible]	[illegible]	A36
B		1	CYL. HOINGE PIN		
	1	1	[illegible]	30	A36
	1	1	CYL. TORSION BRACKET HG. [illegible]	10	W.S.
	1	1	[illegible]	[illegible]	A36
	1	1	[illegible]	[illegible]	-
	3	1	TYMCO SLEEVE [illegible]		BRZ
			[illegible]		
	1	1	CYL. TORSION BRACKET [illegible]	10	W.S.
	1	1	[illegible]	[illegible]	A36
	1	1	[illegible]	[illegible]	-
	3	1	TYMCO SLEEVE [illegible]		BRZ
			[illegible]		

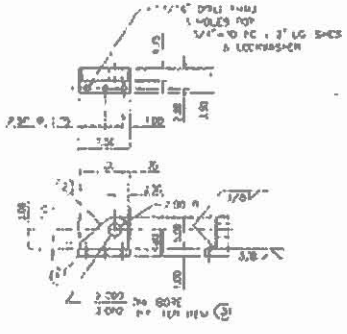

CYL. HOINGE BRACKET - WELDED STEEL
REQD. AS SHOWN EST. WT. 20#

CYL. HOINGE BRACKET - WELDED STEEL
REQD. OPP. HAND EST. WT. 20#

FOR CONSTRUCTION

APR 1 1 [illegible]

VENETTA
ENGINEERING & MFG.
[illegible] WEST LIBERTY ST., MEDINA, OHIO [illegible]

CEMI INT., INC./DONCVAN CENO
VESSEL ASSEMBLY
FRONT DOOR DETAILS

0020-304

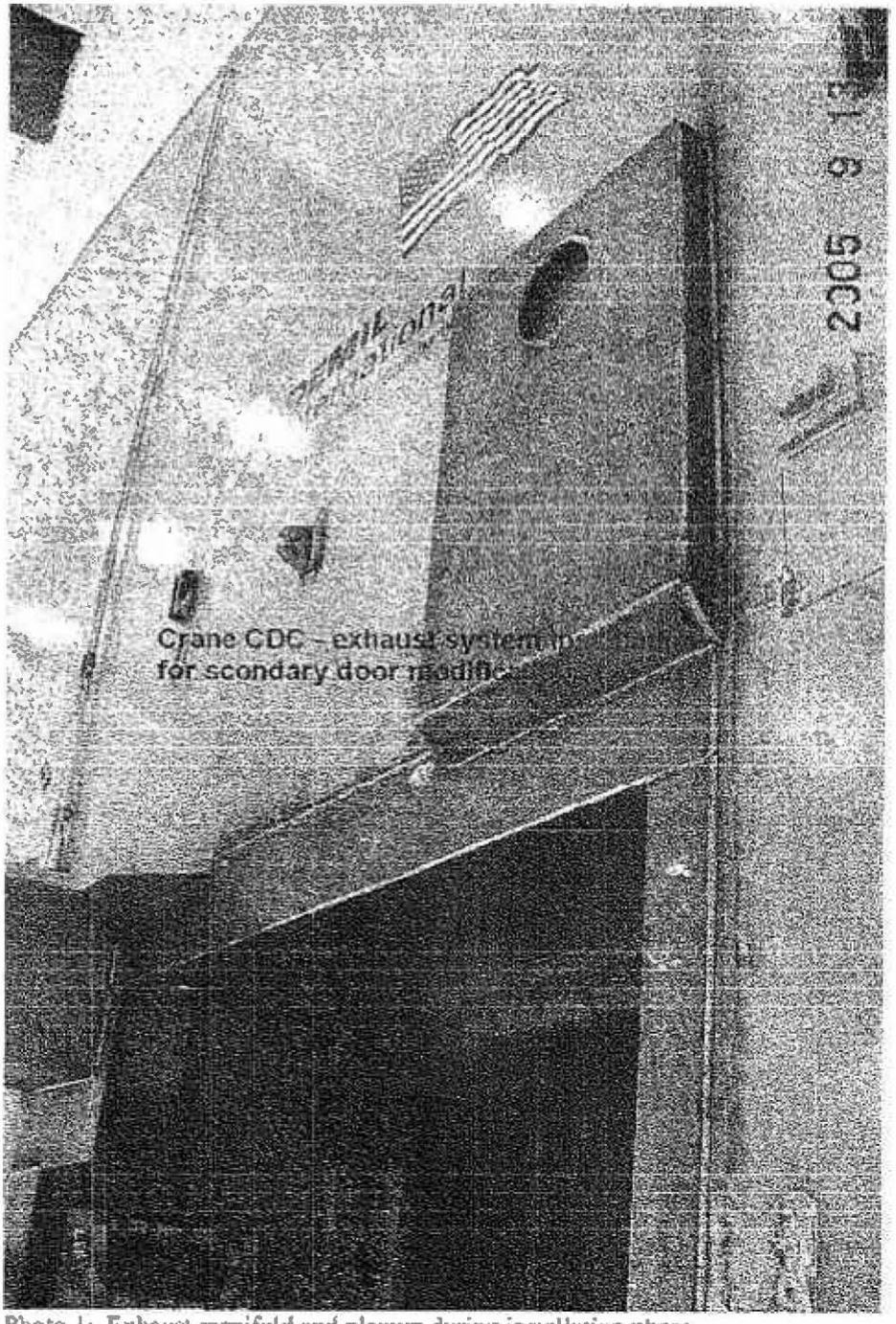

Photo 1: Exhaust manifold and plenum during installation phase.

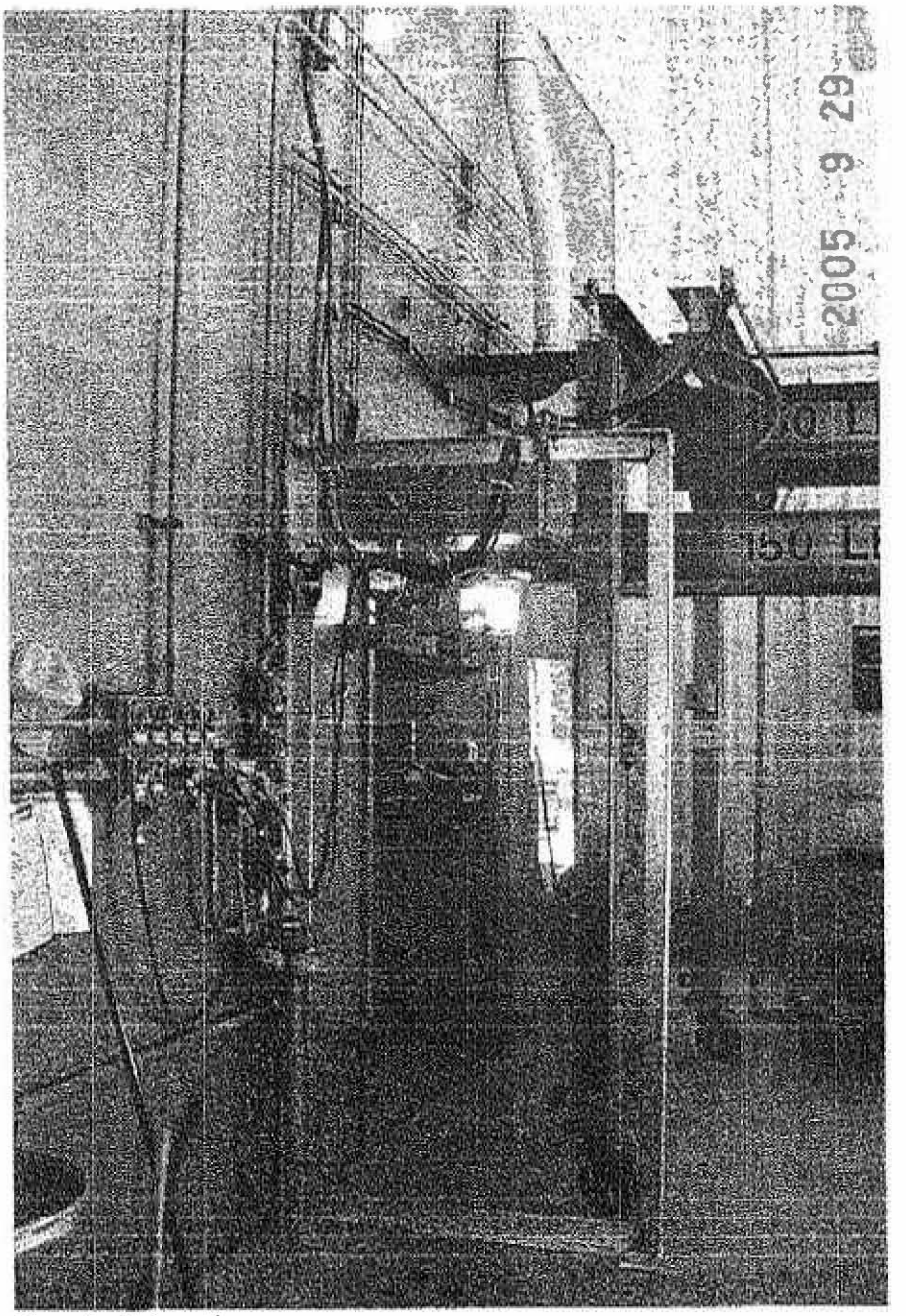

Photo 2: Exhaust hose.

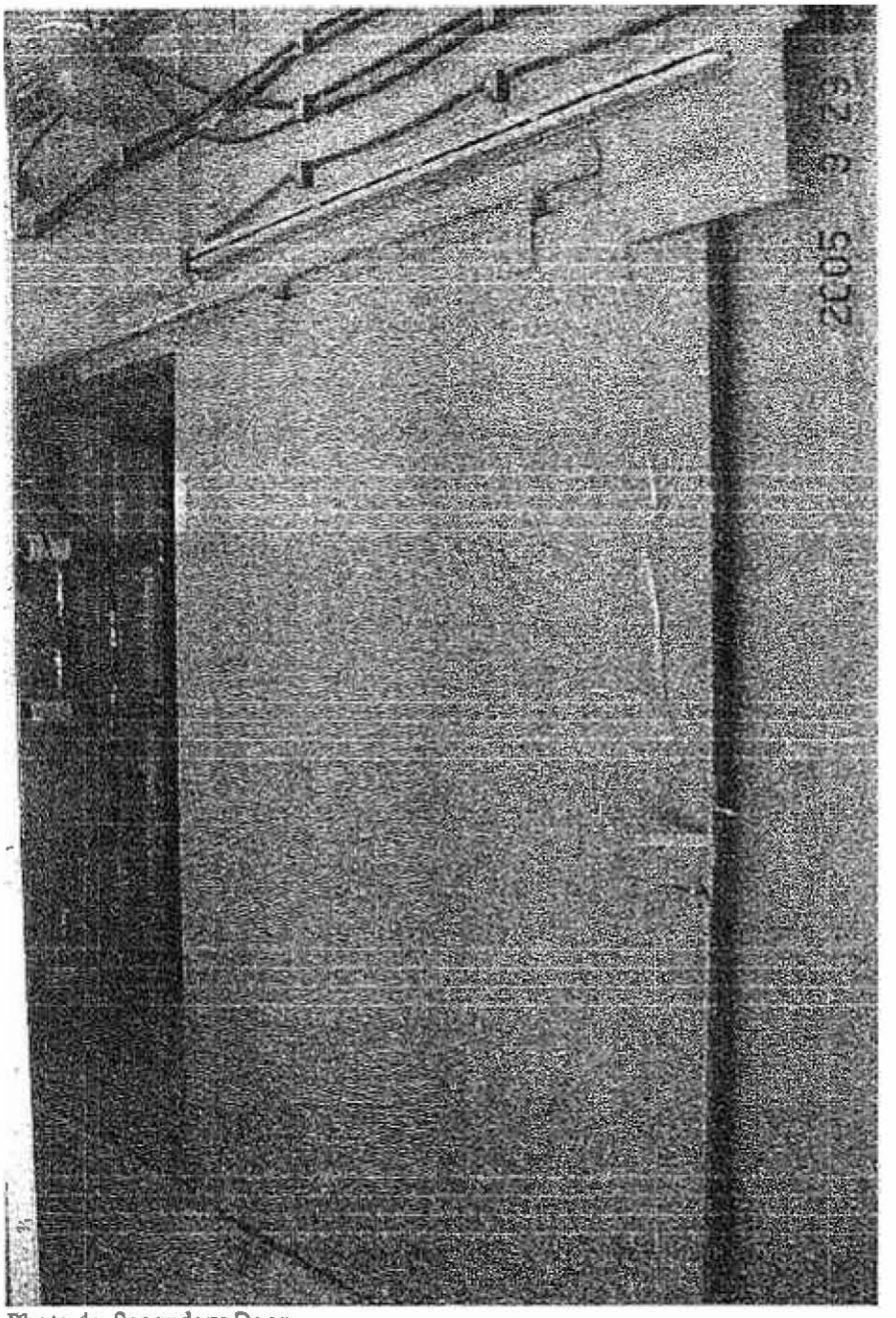

Photo 4: Secondary Door

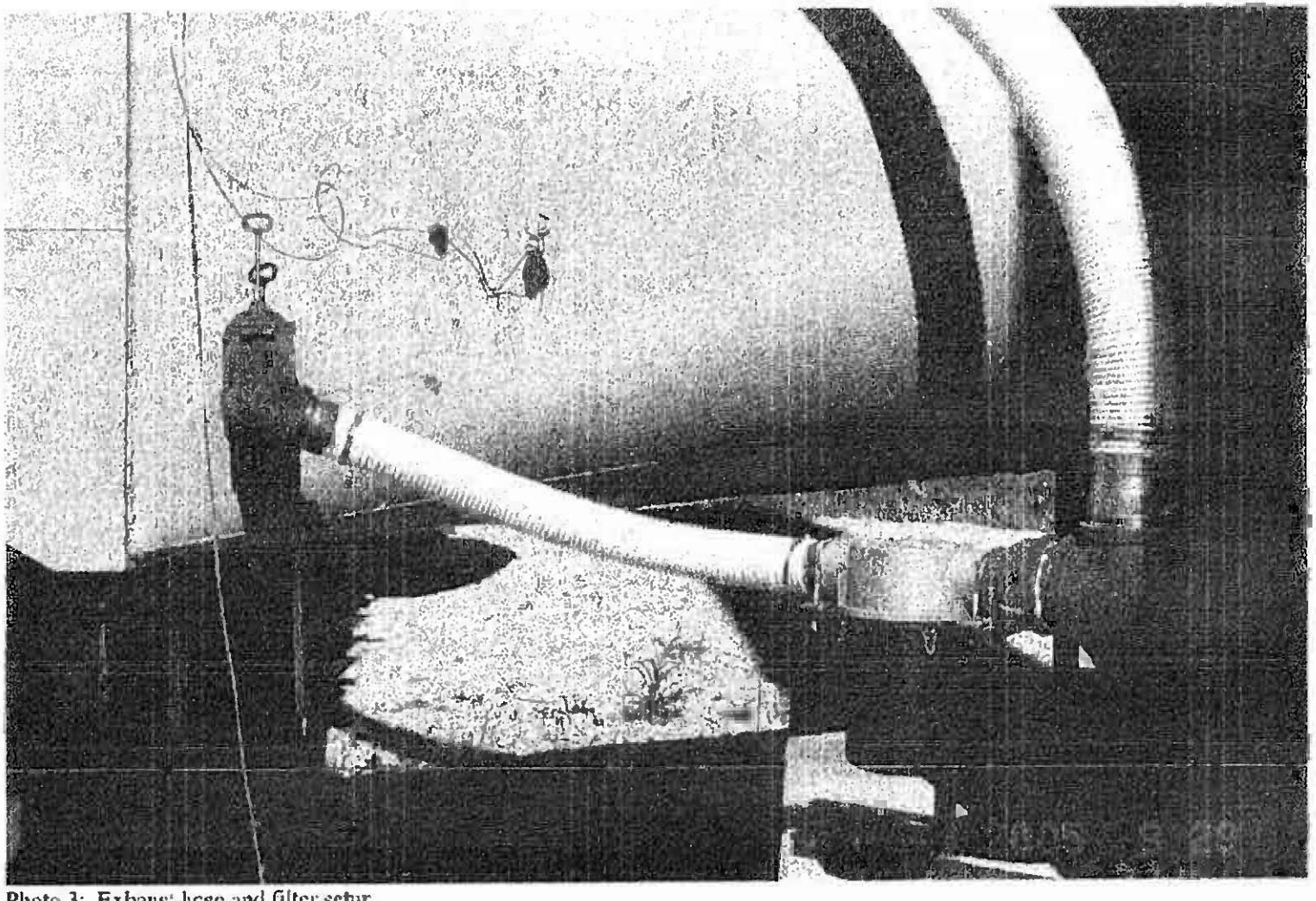

Photo 3: Exhaust hose and filter setup.

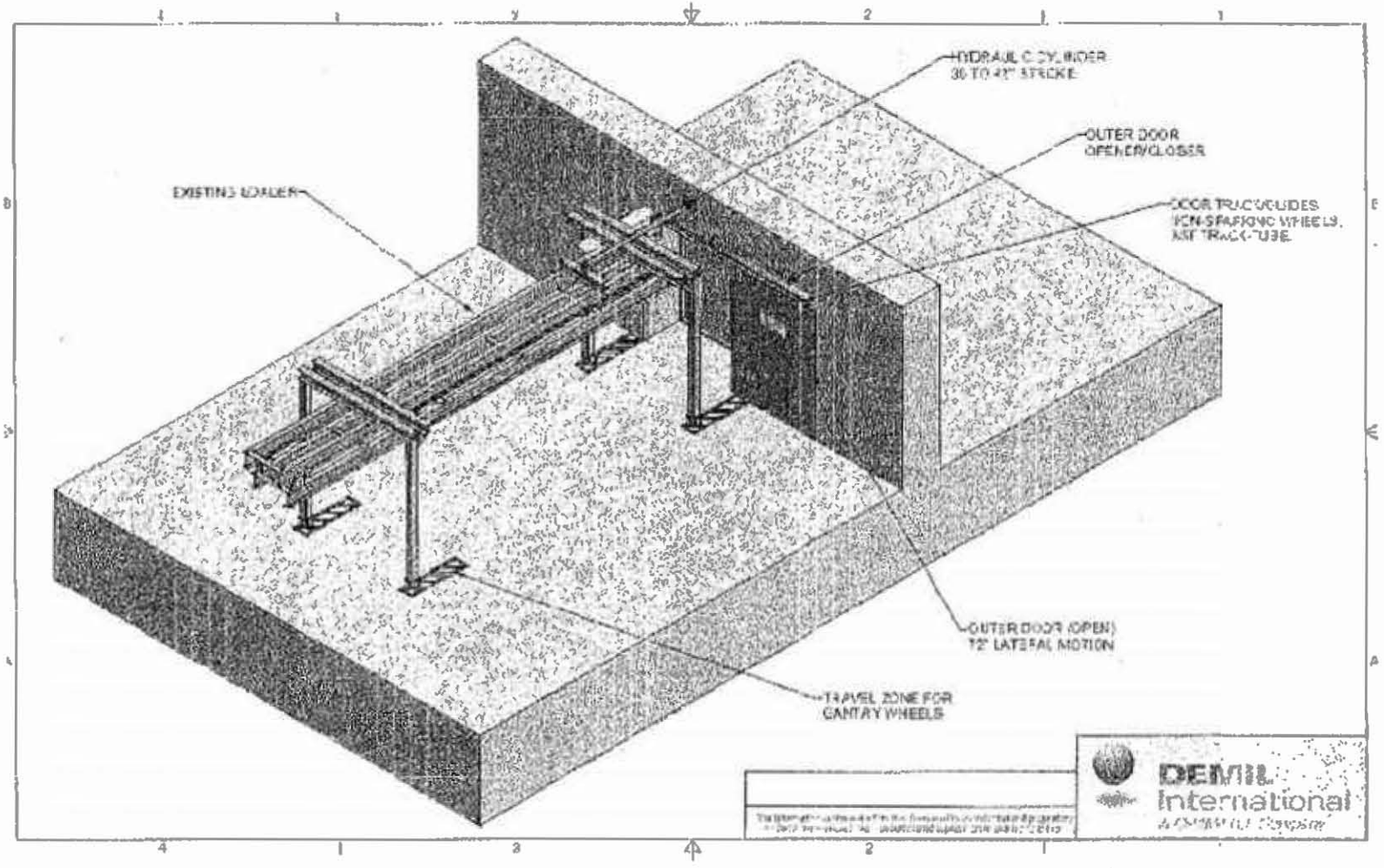
HYDRAULIC CYLINDER
OUTER DOOR
OPENER/CLOSER
EXISTING LOADER
OUTER DOOR (OPEN)
12" LATERAL MOTION
TRAVEL ZONE FOR
CANTAY WHEELS
DEMIL
International

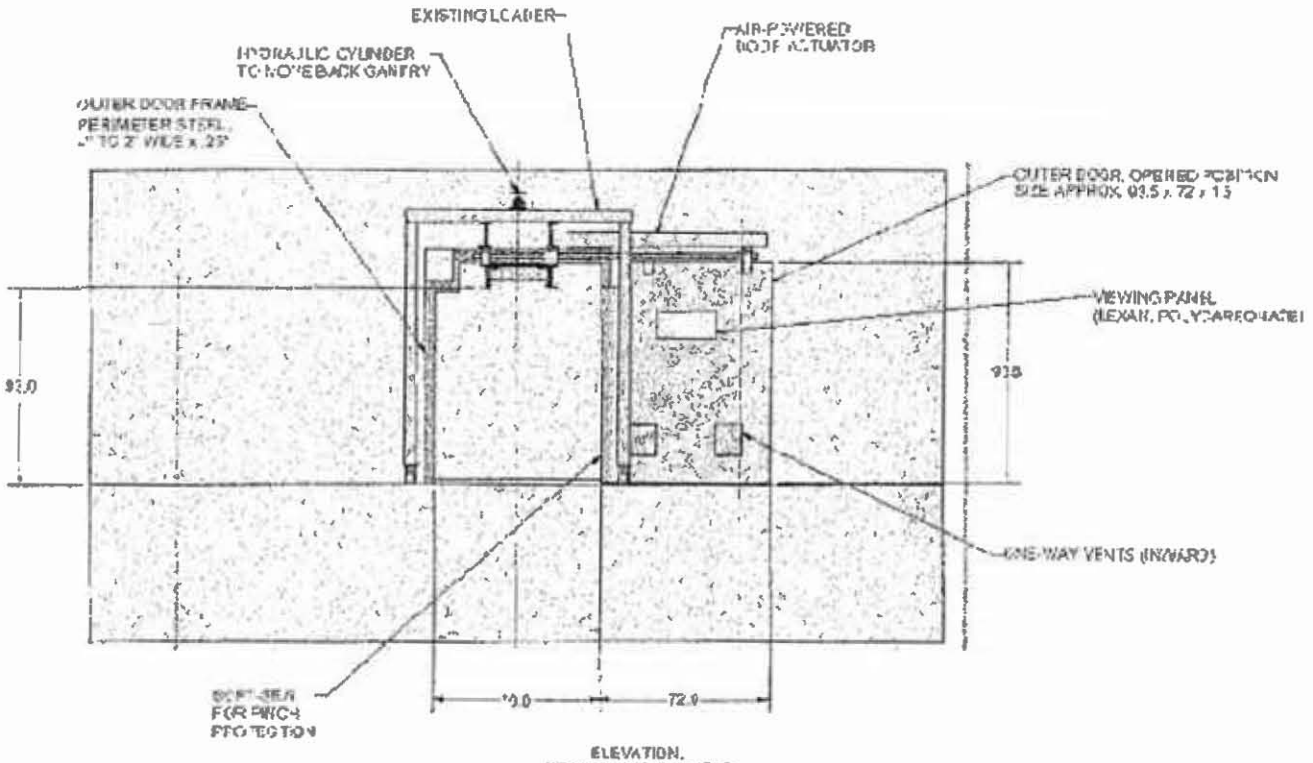

DEMIL International

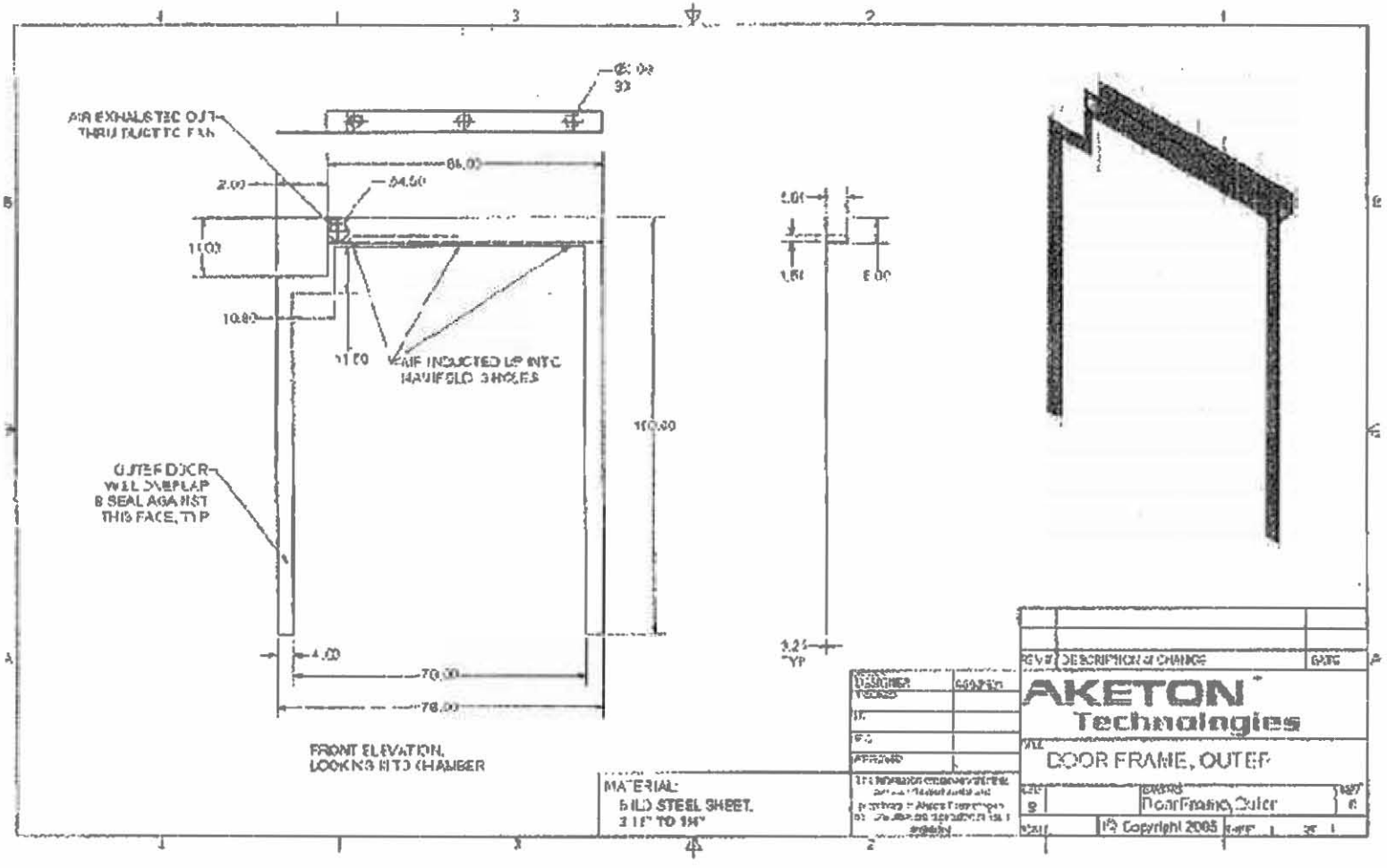
AIR EXHAUSTED OUT THRU DUCT TO FAN
2.00
84.50
11.00
10.00
11.00
AIR INDUCTED UP INTO MANIFOLD SHOLES
110.00
OUTER DOOR WILL OVERLAP & SEAL AGAINST THIS FACE, TYP
4.00
70.00
78.00
FRONT ELEVATION, LOOKING INTO CHAMBER
1.00
1.50
6.00
1.25 TYP
REV
DESCRIPTION of CHANGE
DATE
AKETON Technologies
DOOR FRAME, OUTER
Door Frame, Outer
© Copyright 2005
MATERIAL:
MILD STEEL SHEET, 3/16" TO 1/4"

Figure D-9

PCS Fan – Control System

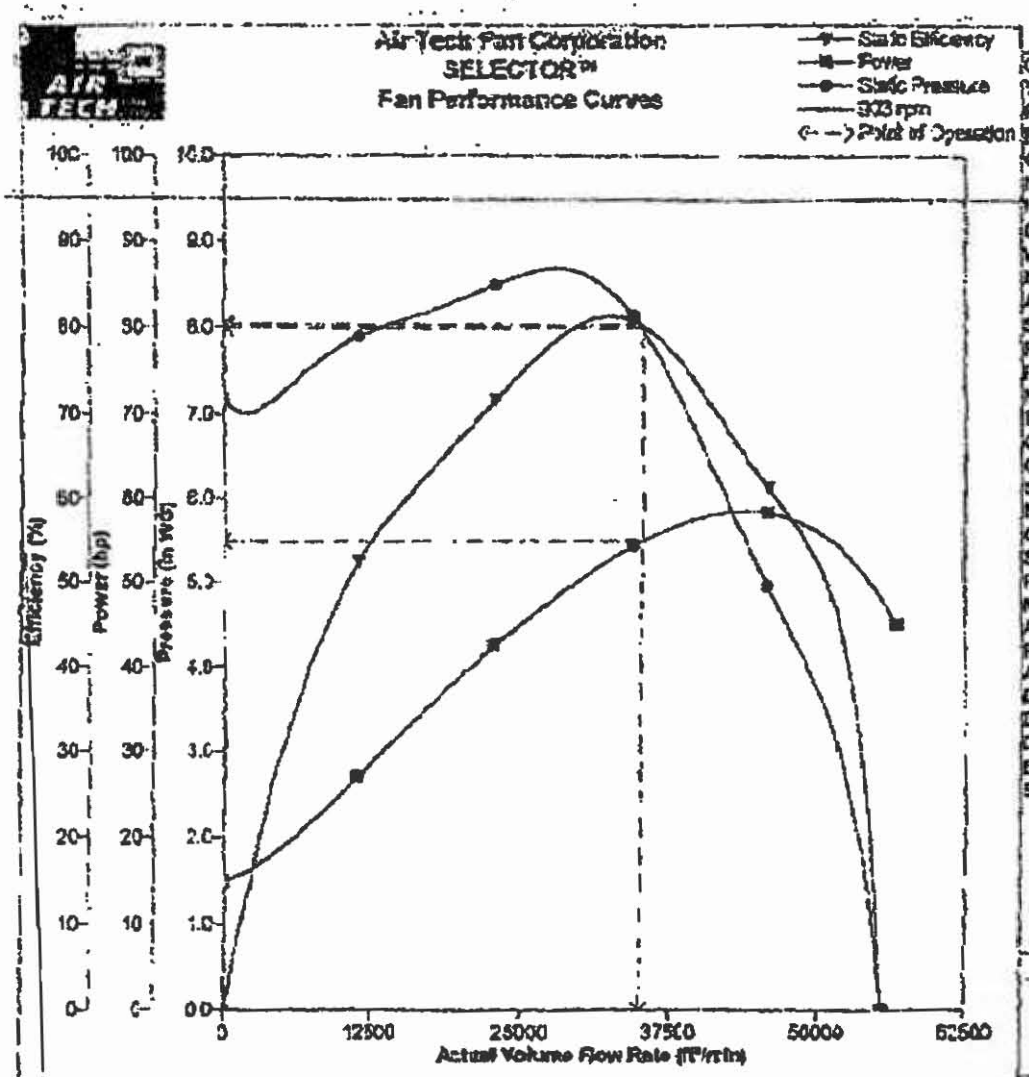

AMCA Licensed for Air Performance without Appurtenances. Power (bhp) excludes drive losses.
Performance shown is for installation type B, Free Inlet, Ducted outlet.

Copyright 1995-2001 Air Tech Fan Corporation

Fan Selection Data

Customer	pcs
Tag	
Product Type	BSW
Product Size	450
Class	2 — 3
Material	Steel
Inlet Appurtenances	None
Outlet Appurtenances	None
Wheel Width	100 %
Max. Design Temperature	200 °F
Actual Volume Flow Rate	35000 ft³/min
Static Pressure	8.00 in WG
Fan Speed	993 rpm
Power	54.83 hp
Negative Inlet Pressure	0.00 in WG
Elevation	0 ft
Operating Temperature	70 °F
Operating Density	0.0750 lb/ft³
Static Efficiency	80.4 %
Mechanical Efficiency	84.4 %
Outlet Velocity	2547 ft/min
Static Pressure @ 0.075 lb/ft³	8.00 in WG
Power @ 0.075 lb/ft³	54.83 hp
Maximum Speed	1020 rpm
Annual Operating Period	8760 hrs
Power Cost	0.100 $/kW-h
Annual Operating Cost	$ 35514
Ducted In & Out	No
Directivity	Q=2
Distance to Acoustic Center	5.0 ft
Estimated Sound dBA	83 dB

Sound Power Levels (Lw):

1:	96 dB	5:	91 dB
2:	96 dB	6:	86 dB
3:	94 dB	7:	81 dB
4:	93 dB	8:	76 dB

Representative

Pollution Control Systems Inc.
Phone: 847-394-8396
Fax: 847-394-8377

Version 3.01
Tuesday, September 17, 2002 16:19:06

Figure D-10

APE/MPTS/CDC Access Control Drawings

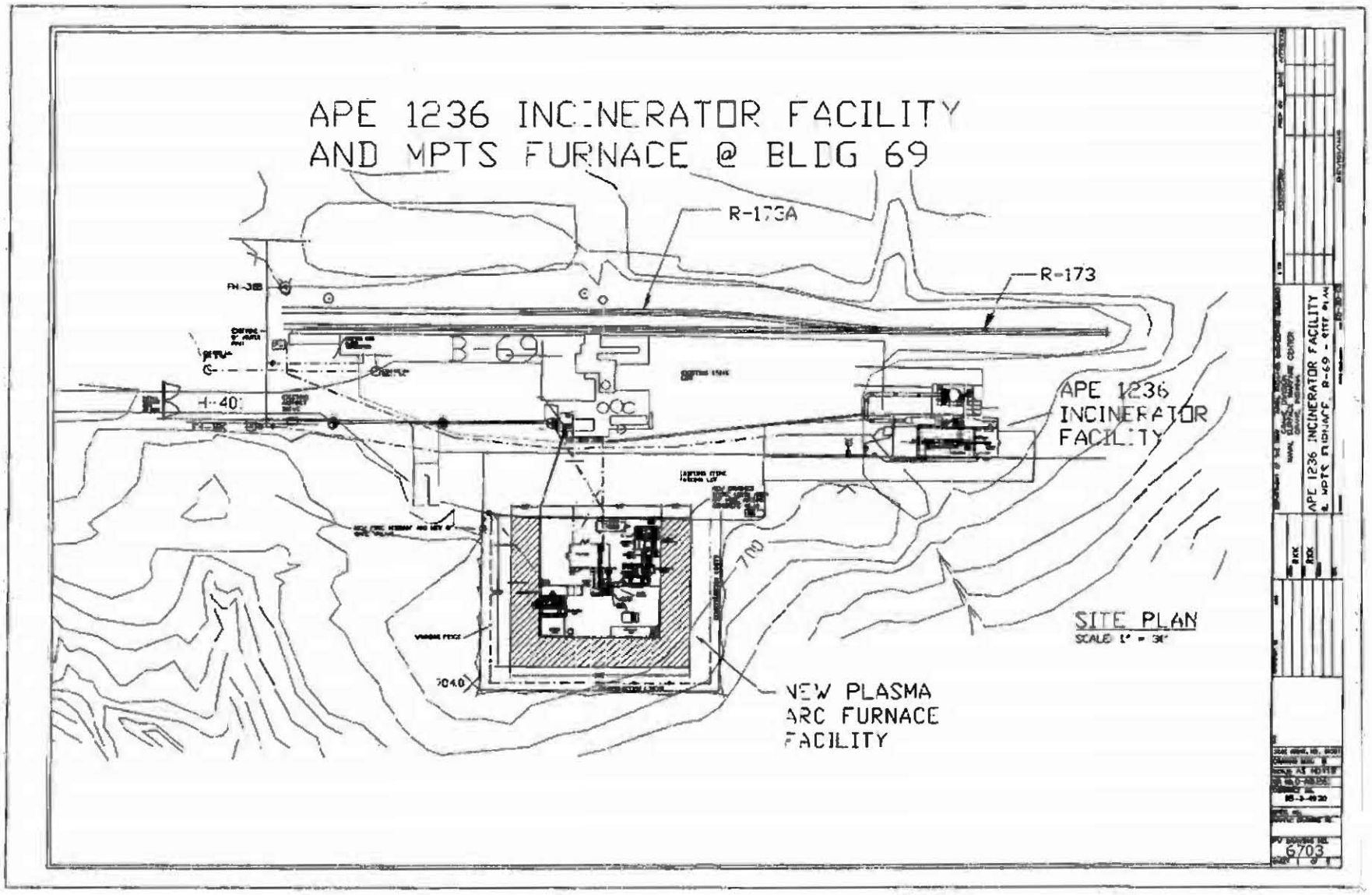
APE 1236 INCINERATOR FACILITY
AND MPTS FURNACE @ BLDG 69
R-173A
R-173
B-69
APE 1236
INCINERATOR
FACILITY
700
NEW PLASMA
ARC FURNACE
FACILITY
SITE PLAN
6703

SHEET NO.		DRAWING TITLE
1	GA-1	TITLE SHEET & SITE PLAN
2	A-1	BUILDING FLOOR PLAN
3	A-2	BUILDING ELEVATIONS & SECTIONS
4	C-1	BUILDING CONCRETE PLAN & NOTES
5	C-2	CONCRETE SECTIONS & DETAILS
6	M-1	MECHANICAL PLAN
7	P-1	PLUMBING/MECHANICAL PLAN & DETAILS
8	E-1	ELECTRICAL PLAN - LIGHTING
9	E-2	ELECTRICAL PLAN - POWER
10	E-3	ELECTRICAL PANELS & DETAILS
11	LP-1	LIGHTNING PROTECTION PLAN
12	LP-2	LIGHTNING PROTECTION DETAILS
13	FP-1	FIRE PROTECTION PLAN

NOTES & COMMENTS

1. CONSTRUCT CRUSHED STONE DRIVEWAY AND PARKING LOT WITH FILTER FABRIC BELOW, 3 INCHES OF #2 STONE, AND 6" OF #53 STONE ON TOP, COMPACTED.
2. BENCH MARK INFORMATION PROVIDED BY FACILITY ENGINEER ON DATE OF SURVEY.
3. EXISTING UTILITIES SHOWN WERE OBSERVED OR REPORTED ON THE DATE OF SURVEY.
4. FOUNDATION DRILLING AND TESTING WAS PERFORMED BY HOLCOMB FOUNDATION ENGINEERING CO., INC. ON MARCH 20, 2001. SEE SEPARATE REPORT DATED MARCH 28, 2001.
5. FINISHED FLOOR ELEVATION OF NEW BUILDING IS 695.50'. TOP OF CONCRETE IS 695.0' (6" HIGH CURB AROUND PERIMETER OF BUILDING WHICH BUILDING AND WALLS SET UPON.)

NOTE	QTY.	DESCRIPTION
1	1	CONTROL BUILDING - REF.
2	1	BLAST CHAMBER 33'-0" x 3'-0"
3	1	CONCRETE PADS 30' x 30'
4	1	CONNECTION TANK 10' x 10'
5	1	ANTENNA/CONTROL STATION FOUNDATIONS
6	1	GRAVEL STONE DRIVEWAY/PARKING AREA
7	1	4" O.D. 1/4(+)300 MED BURIED
8	1	GAS PIPE TO METER (BY GAS COMPANY)
9	1	6" D.I. WATER PIPE (TYP)
10	1	1-1/2" COPPER PUBLIC WATER
11	1	4" TELEPHONE/SIGNAL CONDUIT BURIED

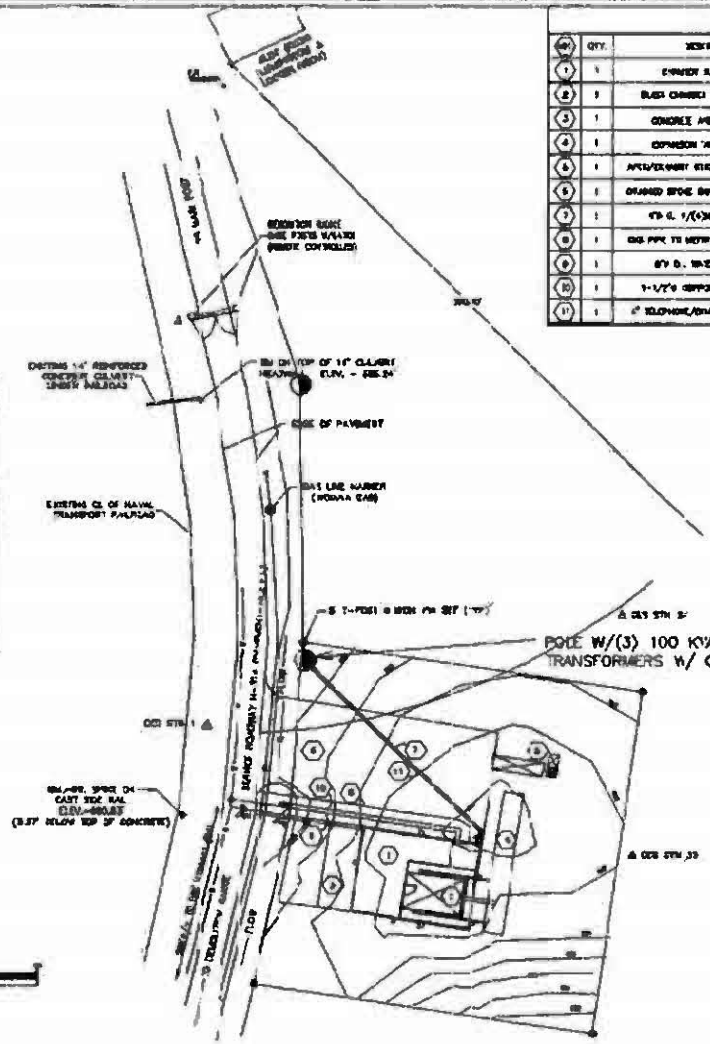

GA-1

DETONATION CHAMBER FAC.
NAVAL ORDNANCE CENTER
OPERATIONS BUILDING, GENERAL ARRANGEMENT

REVISIONS

6748

Figure I-1

Sampling Grid Areas – Inside CSF

SAMPLING GRID FOR BUILDING 2993
INSIDE LIQUID STORAGE AREA
AND AWNING

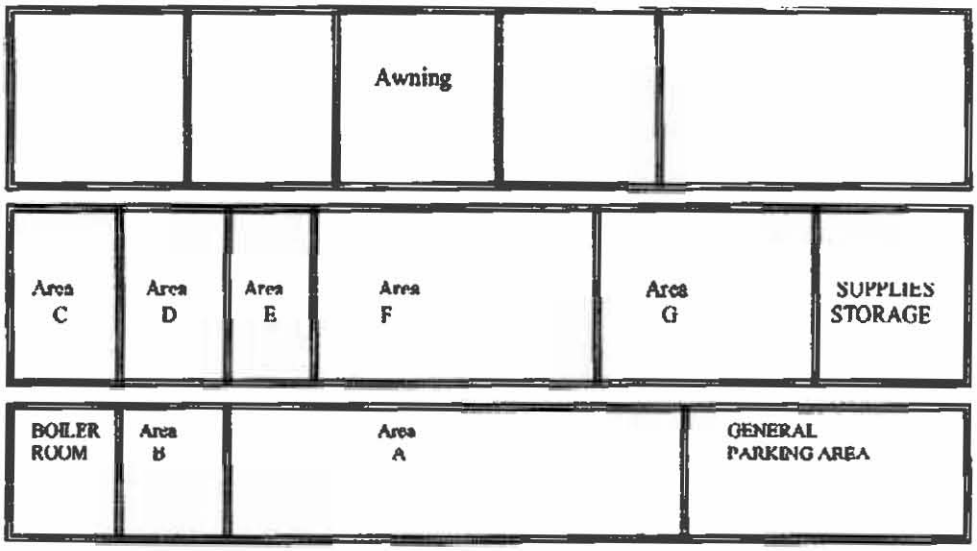

SAMPLING GRID

Awning = ~36 Nodes
2993 = ~54 nodes

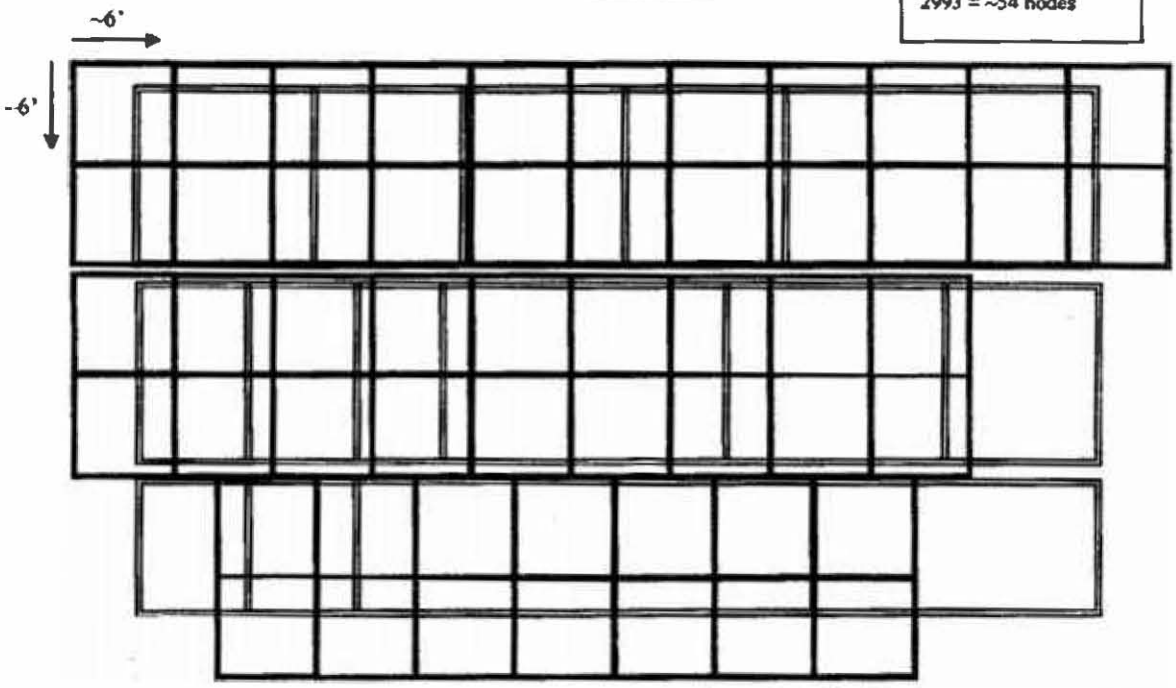

SAMPLING GRID FOR BUILDING 3435

Liquid Storage Area

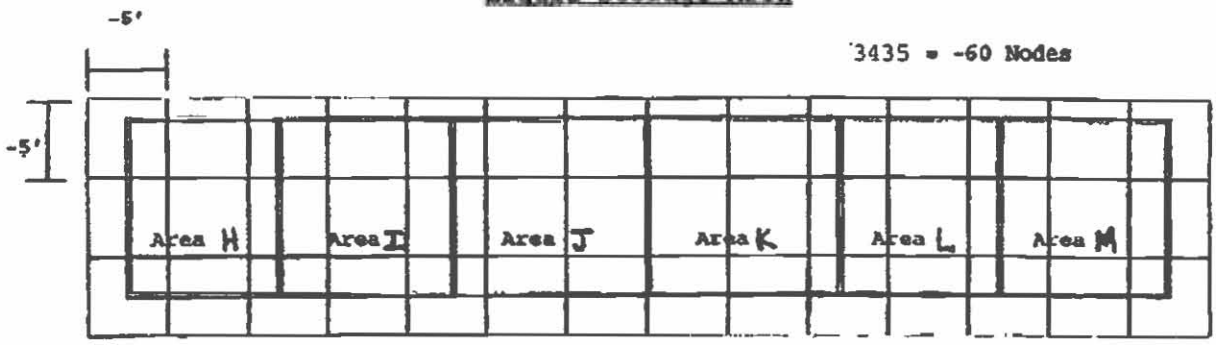

Figure I-2

Sampling Grid Areas – Perimeter of CSF

GRIDDED AREA OF NON-LIQUID HAZARDOUS WASTE STORAGE AREA

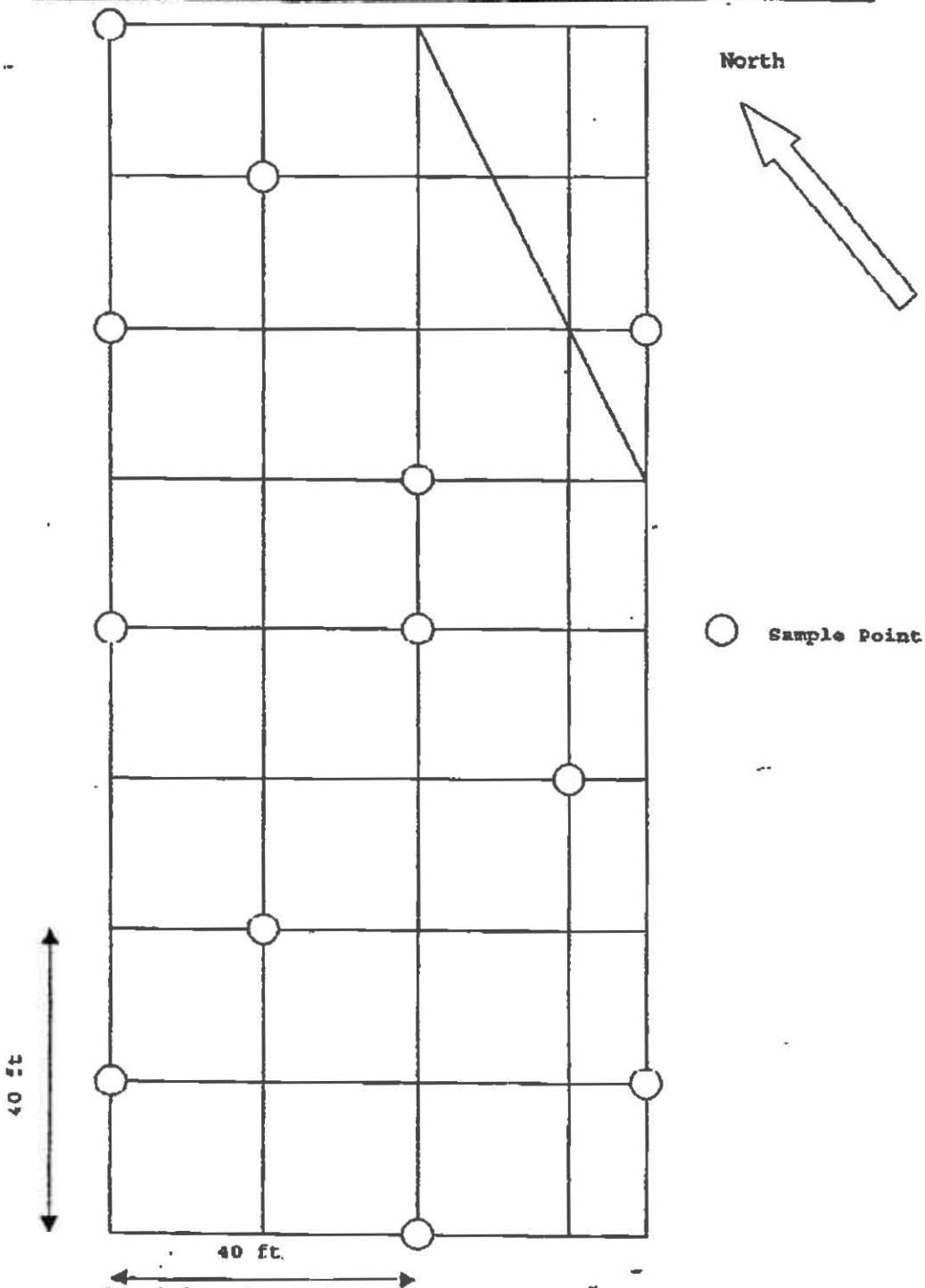

Proximity of outside pad to B-2993 and B-3435 = 50 ft.

Figure I-3

Sampling Grid Areas – Perimeter of CSF - Background
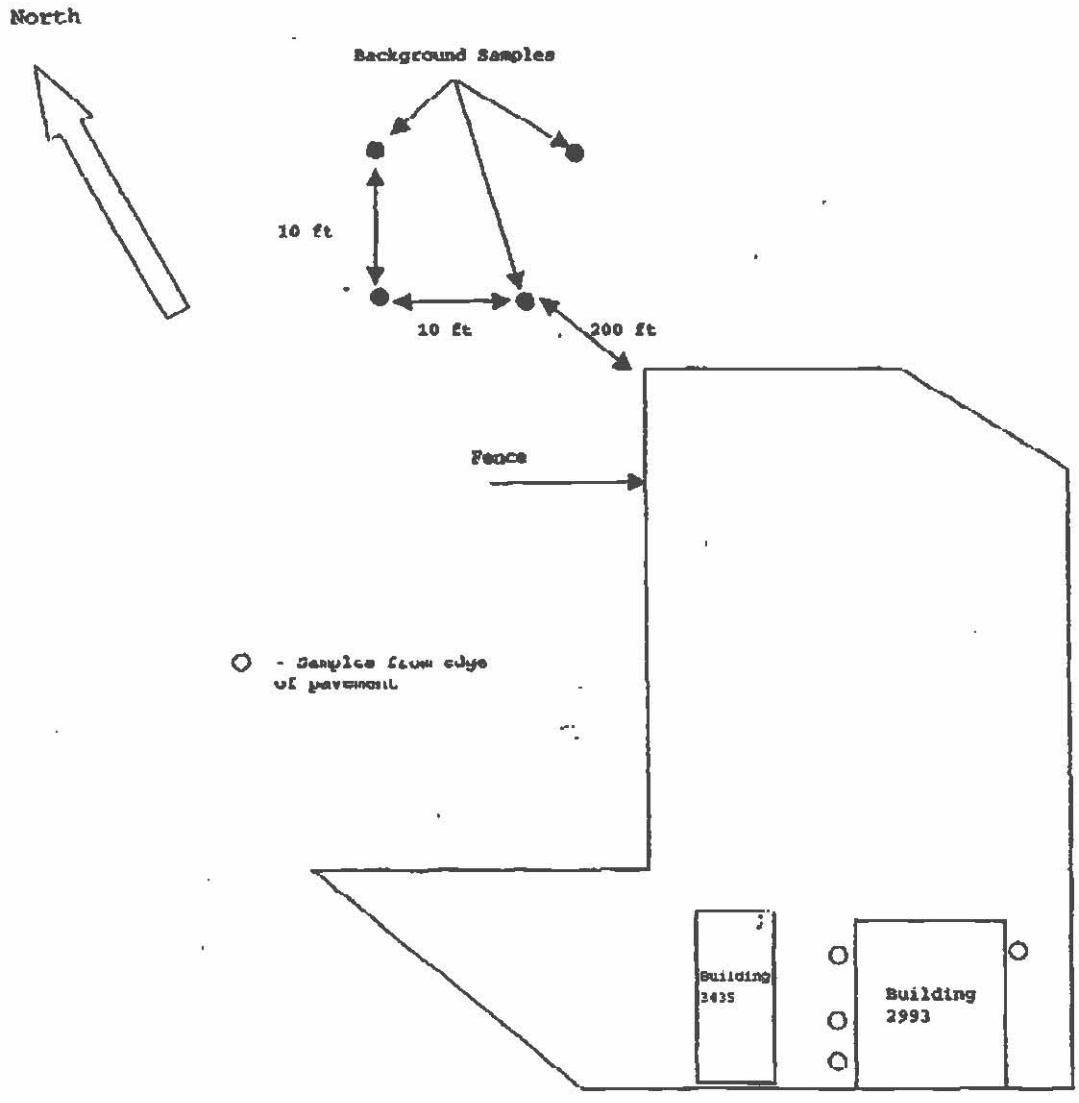
LOCATION OF BACKGROUND SAMPLES